Claw Marks™

EXCERPTS FROM: Joan's Fighting Spacecraft

The Onboard Magazine of TCS Tiger's Claw

Vol. 1 No. 4 Issue #4/2654 (Hard copy Edition)



WING COMMANDER
Special Edition

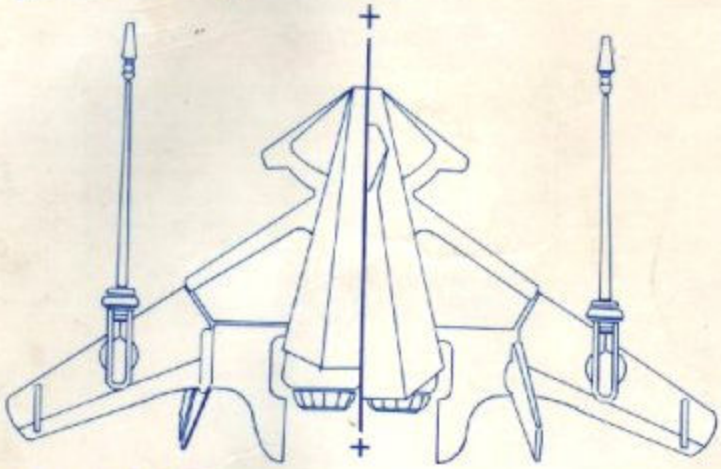

Also in this Issue

- Taggart's Tactics —
  "Even Natural Fliers Need to Remember Basic Tactics"
- Profiles of Kilrathi and Terran Pilots —
  "Their Strengths and Weaknesses"
- News Briefs from the Vega Sector

Game Credits

Designed & Directed by
Chris Roberts

Software Engineers
Chris Roberts, Steve Muchow, Paul Isaac, Steve Beeman,
Ken Demarest III, Herman Miller

Dogfight Intelligence
Ken Demarest III

Dogfight Choreography
Steve Beeman, Erin Roberts

3 Space System
Chris Roberts

ORIGIN Graphic Systems
John Miles, Chris Roberts

ORIGIN Sound System
Herman Miller

Artwork
Denis Loubet, Glem Johnson, Daniel Bourbonnais,
Keith Berdak, John Watson

Screenplay
Jeff George

Additional Written Material
Steve Cantrell, Philip Brogden

Musical Score
George A. Sanger, David Govett

Sound Effects
Marc Schaefgen

Quality Assurance
Marc Schaefgen, Philip Brogden, Steve Cantrell, Greg Paul Malone II,
Erin Roberts, Mike Romero, Jeff Shelton, Scott Shelton,
Brian Tompkins, John Watson

Produced by
Chris Roberts and Warren Spector

Claw Marks™

The Onboard Magazine of the TCS Tiger's Claw (tm)

Vol.1 No.4 Issue #4/2654 (Hard Copy Edition)

In this issue...

Now Hear This 2
Words From the Editor

Comm Relay 3
News Briefs

Taggart's Tactics 4
Even Natural Fliers Need to Remember Basic Tactics

Friend or Foe 11
Updates to *Joan's Fighting Spacecraft*

Weapons 28
Weapons of the Terran and Kilrathi Fleets

Pilot Profiles 29
Confederation Pilots
Kilrathi Pilots

On the Flight Deck 37
Medal Identification for New Recruits

Playing Wing Commander 38
Introduction, Strategy and Tactics

Publisher: Col. Christopher Robers
Editor-in-Chief: Maj. Warren Spector
Senior Editor: Cpt. Arron Allston
Contributing Editors: Cpt. Jeff George, Lt. Steve Cantrell, Lt. Ken Demarest III
Contributing Artist: Lt.Glen Johnson
Production Staff: Cpt. Mike Harrison

Claw Marks is the onboard magazine of the *TCS Tiger's Claw*. It is produced monthly (Terran calendar in hard copy and e-file editions. E-file editions are free to all crewmen aboard *Tiger's Claw*; hard copy subscriptions available by special arrangement.

The e-file edition of this issue is available from ship's library as >>Periodicals>>Armed Forces>>Claw Marks>>4/2654.

All contents of this ***Wing Commander*** *tm, Special Edition of Claw Marks #4/2654 are copyright (c) 1990 by ORIGIN.* ***Wing Commander*** *tm, Tiger's Claw tm, and Claw Marks tm are trademarks of Origin Systems, Inc*

Now Hear This:
Words from the Editor

Space is a near-vacuum, as all good Academy graduates and most two-year-old children know. And if you ask, "If I drop a pebble into space like I do into a pool of water, will it cause ripples?" you'll get some strange looks from everyone.

Nevertheless, someone dropped a pebble in space not too long ago, and we're still encountering the ripples.

Last month, two very good pilots (Lt. Larry Dibbles and Captain R.A. Skinner) went out on a routine mission and didn't come back. Here in Vega Sector, it happens all the time. You sit for awhile; you look at your pal's empty bunk; you think about where he's gone and hope you won't soon follow his lead; you probably get drunk. Then it's back to work.

Yes, it happens all the time. But it's been happening a *lot* lately - and not just routine casualties, but casualties caused by sloppiness, over-eagerness, and a variety of other fatal diseases. The ship'sstatistical resources show that avoidable casualties are up 5% over this time last year... and are up 9% over expected optimum performance. So, we're seeing ripples.

Here's one ripple: Two pilots are gone and won't be back.

Another: This issue, we've asked one of the ships most experienced pilots, Major James Taggart (aka Paladin on the flightline) to talk about The Basics: Basic tactics, goals, and maneuvers. Even if you're sure you know The Basics, read what he has to say, and remember that Paladin is still



going strong after twenty-plus years as a combat jockey... and even if he doesn't wear his Ace of Aces ribbon, its still there.

Another: You won't be seeing *Hornet's Nest* - a carrier which bore an unfortunate and unmistakable resemblance to the *Tiger's Claw* - were the product of an artist and pilot who went by the moniker of Tooner. We like to remember Tooner as having a deft wit and a diseased mind, but all we can do *is* remember him. He was also known as Lt. Larry Dibbles. R.I.P.

Then, it's back to work. Also in this issue, we have the latest Vega Sector update from *Joan's Fighting Spacecraft* including the most up-to-date- data on the Kilrathi ships we're facing; an excerpt from Borger's new survey of Terran and Kilrathi weapons systems; and our usual assortment of news, facts, trivia, and profiles. Enjoy them... but think about them.

COMM RELAY

News from the Terran Confederation Armed Forces CommNet

TCSO Show Scheduled

(Tiger's Claw, TCAFCN) - There's good news for servicemen aboard the TCS Tiger's Claw: The TCSO (Terran Confederation Service Organization) will send an entertainment unit to the much-decorated carrier as early as next month.

The TCSO troupe includes dancers (normal and zero-g), singers, comedians, and the Confederation's best cyberlink illusionists.

Vidstar Saranya Carr, exotic heroine of the popular *Luna Jones, JumpScout* serial, is accompanying the TCSO troupe to the *Tiger's Claw*. Carr, 25, stated, "You bet your life I'm happy to be working with the TCSO. I mean, you see Luna Jones blowing Kilrathi fuzzies out of space every week, but Saranya Carr doesn't know a nav computer from a dialogue transceiver. Since I can't help our fighting forces directly, I'm proud to be able to entertain and build morale. Besides," she adds, "I'm not completely unselfish. Perhaps I can persuade *someone* to give me a ride in one of those new *Rapiers...*"

News From Earth (Sol III)

(New York, North American States, Terran News Services) - On 2654.080, representatives of the Committee for Interaction with Alien Intelligences announced contact with a new alien race.

CIAI spokesman Iola Jonson made the following statement: "The CIAI regularly launches unmanned probes to uncharted jump-spheres; these probes contain our most sophisticated translation and interpretation equipment. Eight days ago, Probe Number H227 reappeared in a Terran jump-point carrying data and artifacts from a species we are currently referring to as the Double Helix.

From the information we have so far been able to interpret from H227's records, the Double Helix are a sentient race possessing space travel, and we are not ruling out the possibility they possess FTL drive technology. Physically, they appear to be carbon-based arthropods which communicate through scents and pheromones. Their name is derived from the double-helix shape of their spacecraft."

World Science Federation officials believe this to be the most significant contact with an alien species since the discovery of the Kilrathi, and hope that contact will remain friendly.

Tiger's Claw Promotions

To Lieutenant: S.E. (Broadway) Sarasin
To Captain: Fatima (Cymbals) Haroud

Tiger's Claw Awards

Ace: 2nd Lt. Todd (Maniac) Marshall
Bronze Star Captain Jeannette (Angel) Devereaux
10-Mission Ribbon 1st Lt. Tanaka (Spirit) Mariko

TAGGART'S TACTICS

How To Go Out There, Accomplish Your Objective, and (Best of All) Come Back Home Again.

Here's a simple question from a simple test, every fighter-jock answered hundreds of these at the Academy.

Hypothetical Situation: You and your wingleader, flying *Scimitars*, are on a Strike mission against a *Ralari*-class destoryer. En route, you see two damaged *Jalthi*-class heavy fighters, the survivors of an engagement which must have just ended.

Ordinarily, you would not wish to engage the larger fighter-craft. However, both of these craft are in dire straits. One is tumbling helplessly, all stabilization hardware destroyed; the other is limping away, his thrusters blasting intermittently, his maneuvering obviously impared.One target lies a few seconds to port of your flight path, the other a few seconds to starboard.

Your wingleader is not inclined to go after either of these marks; he persses on, plodding toward the strike objective.

Question: Do you (a) keep with your wingleader, ignoring these easy marks; (b) roll out for a couple of seconds to destroy the completely-helpless fighter; (c) roll out for a very brief engagement with the seriously-damaged fighter; (d) go after both damaged enemies; or (e) none of the above?

If you answered (e), do the corps a favor: Resign your comission and stay away from civilian piloting jobs. Indecisionkills faster and more reliably than making the wrong decision.

If you answered (b), (c), or (d), well, everyone who's ever put on an acceleration suit knows how you feel... but you know it's the wrong answer. It's not "by the book," as boring as that may sound; you've left your wingleader unguarded for a few critical seconds.

If you answered (a), you deserve congratulations... but perhaps you don't deserve many. It's easy to pick the right, by-the-book answer when filling out a test in the placid atmosphere of your own quarters or a testing hall. It's a little tougher in the cockpit during an actual mission. In the field, the urge to mark up a couple more kills - especially safe ones, and *especially* when you're only one or two kills short of your Ace classification - will ofter overcome your Academy-drilled, by-the-book impulses.

Of course, this is only a hypothetical situation. Unfortunately, it's only hypothetical for *you*: It was real for Captain R.A. ("Mule-Skinner") Skinner and Lt. Larry ("Tooner") Dibbles.

Truth from the Black Box

A month ago at the time of this writing, Captain Skinner and Lt. Dibbles went out as part of a strike team assigned to destroy the *Ralari*-class destroyer *Rathtak*. They launched from *Tiger's Claw* at ship's 2300 hours. At 2321 hours, the carrier bridge received transmissions from Skinner to Dibbles, ordering him back into position. This was the last transmission from either man. Ever.



Follow-up crews were eventually able to find the remains of Skinner's *Scimitar* and its "black box" flight recorder, and were able to reconstruct what happened from its record of radar images.

The real scenario unfolded exactly like above. Mule-Skinner and Tooner ran across the scene described. Tooner decided for a quick kill, and spun out to engage the damaged, but still active, *Jalthi*-Class fighter. Mule-Skinner ordered him back into position and, either presuming that Tooner would immediately turn back, or just unwilling to abandon or delay his mission because of a somewhat flaky wingman, pressed on towards the objective. Tooner did not immediately turn back, probably plannig to make just one strafing run before turning back to rejoin his wingleader.

Unfortunately, the painful truth was that neither *Jalthi*-class fighter was damaged.

When Lt. Dibbles came within a reasonable assault distance of his target, that target abruptly rolled out in controlled flight and engaged him. Simultaneously, the "dead" Kilrathi fighter powered up, stopped spinning, and moved into position behind Captain Skinner.

To Lt. Dibbles' credit, he was able to hold off his opponent for quite a while. But while he was in a dogfight with one Kilrathi, the other was destroying his wingleader. Skinner's flight recorder blacks out - owing to the destruction of his fighter-craft - with the radar showing Dibbles still in desperate combat with his opponent.



Even without the benefit of Dibbles' unrecovered flight recorder, it doesn't take too much creativity to reconstruct what hap-



pened next. The second *Jalthi* moved to engage Dibbles. Between the two of them, they blew Dibbles out of space.

"Sometimes you've got to throw the book away." I hear this from pilots both young and old... and sometimes, maybe, it's true. But was it true in this case? No. Dibbles *didn't* have to throw the book away. He wanted a kill, another bright spon on his *personal* record, and to obtain it he endangered the mission objective.



What were the results of this decision? The carrier lost two pilots with several years' worth of combat experience. The carrier's commander had to write the appropriate letters of condolence. The overall strike mission damaged, but did not finish off, the destroyer objective... and while it is not conclusive that the presence of Skinner and Dibbles would have resulted in *Rathtak's* destruction, it is at least possible. Last of all, this error cost the *Thiger's Claw* a great morale-booster: Dibbles was the writer and artist of *Hornet's Nest*, the wonderful comic-strip which appeared in every issue of *Claw Marks* for the last two years-Terran.

The "Book" you're trained to go by was written for a reason. It's a good book, one worth following. It's worth reviewing now.

Basic Tactics: A Review

Let's go over the basic, Academy-standard tactivs you're supposed to follow in the field.

Individual Objectives

Here is the simplist thing in the world to remember - if you're *willing* to remember.

Wingleader Objective: Accomplish the mission objective.

Wingman Objective: Protect your wingleader. If he is eliminated, you must accomplish the mission objective yourself.

There's not much room for variation here. Oh, a seasoned wingleader may decide to trade roles with his trainee wingman, or he might decide to send his wingman to protect a buddy who's being swarmed, while he, the wingleader, goes after another swarm. But in all these cases, nobody is solo. If the two trade roles, we still have a wingleader and a wingman. If the two split up to

help friends under siege, the two are acting temporarily as wingmen to temporary wingleaders. The buddy system is still intact.

Obviously, the important thing here is to maintain the buddy ststem. We live by that system. Without it, we die.

Mission Objectives

Mission objectives vary with the different flight mission types. On Tiger's Claw, 98% of our flight missions fall into these five categories:

Defend: You are assigned to guard a stationary position - a capital ship, base, or jump point. Orbit that position at a distance of 2,500 meters. Do not, repeat, do not break to engage oncoming enemies until they reach a distance of 5,000 meters from the position you're protecting. That's not 5,000 meters from you.

Escort: You are assigned to guard larger ships on rendezvous assignments. Fly parrallel to the ship you're escorting at a maximum distance of 2,500 meters, and keep your eyes open. In the face of oncoming hostiles, don't break and engage too soon: The best time to break formation is when the hostiles have penetrated within 5,000 meters of the ship you're protecting.

Intercept: You are assigned to seek out and engage enemy vessels in a particular area - an anticipated Kilrathi jump point, or a halfway point between oncoming enemies and the ship you're protecting. No particular tactics are called for, except the standard tactics for keeping yourself and your wingmate alive.

Patrol: You are assigned to a flight pattern through unsecured territory. You can decide whether to engage the enemy or to head on in to base. This is where a lot of novice (and some experienced) pilots make lethal errors: Nobody likes to back down. Well, tough. Nobody wants to talk to your widow or widower, either. Consider the situation carefully before engaging the enemy.

Strike: You are assigned to destroy an enemy target, usually a capital ship. Obviously, the idea is to get in quick, launch missiles, blow the thing up, and get out quicker. Unfortunately, the enemy usually decides to defend any target worth destroying. This is where the wingleader / wingman relationship becomes especially critical: The wingleader must get his missiles placed, and the wingman must keep him alive so he can do it. This means that, at the cost of his own personal objectives, the wingman must stick to his wingleader like glue, take out oncoming fighters before they can take out his wingleader, and only drop his own missiles if he has a clear opportunity.

--------- 25 Years Ago ---------

Exploration and colonization ships of the Terran Confederation increase their penetration into Vega Sector.

On 2629.105 (3/15/2629 Terran reckoning), the exploration ship *Iason* encounters a spacecraft of unknown origin. *Iason* commander Jedora Andropolos beams the standard wideband non-verbal greeting designed by the Committee for Interaction with Alien Intelligences.

Captain Andropolos keeps Iason motionless for twenty-two minutes standard while the alien vessel waits. Finally, the alien vessel opens up with all guns, utterly destroying *Iason* and all hands.

First Contact

When you first encounter a flight of enemy fighter-craft, they will almost always be flying in formation. Once initial contact has been made, they will break formation, in pairs, at roughly four-second intervals. Generally, you should likewise break formation to match and engage them.

All of this leads to the question of what to do once you've engaged the Kilrathi. The Book has something to say about that, as we discuss immediately below.

Maneuvering

Twenty years of fighting the Kilrathi have shown us some basic maneuvering tactics which improve your chances of survival. In other words, until your personal flying instincts give you a tactic for every situation, go with these "by-the-book" maneuvers and you'll have a better chance of making it home in one piece. All the Book can do is tip the odds a bit in your favor, but the record shows that this slight improvement in your chances is worth the embarrassment you may feel about doing something the way you were taught at the Academy.

--------- 20 Years Ago ---------

On 2634.186, war is formally declared by the Terran Confederation on the Empire of Kilrah for countless acts of piracy and unwarranted assault.

On 2634.228, Confederation cryptographer Ches M. Penney partially decodes the current Kilrathi cipher. The intercepted message refers to a punitive strike being launched against the Confederation, starting with the colony on McAuliffe and the space station *Alexandria* in orbit around it. Confederation High Command launches a couter-offensive twice the size of the anticipated enemy fleet; it is to reach McAuliffe first and ambush the attackers.

On 2634.235, the Kilrathi fleet reaches McAuliffe. It is four times the predicted size; the incomplete translation of the intercepted message had underestimated the size of the Kilrathi offensive. So begins the McAuliffe Ambush engagement.

In several days of bloody combat, the Terran fleet is all but obliterated, leaving a still-sizeable force of fuctional Kilrathi spacecraft. But the Kilrathi, momentarily daunted by the ferocity of teh Terran resistance, turn back to regroup and repair. The first large-scale Terran-Kilrathi engagement ends with the Kilrathi spearhead momentarily broken.

Standard Maneuvers

You learned all of these in basic flight training, but let's review them here. Inaddition to standard turns, rolls, dives, and climbs, you became familiar with these:

Burnout: Hit the afterburners and increase speed until your pursuer is no longer gaining on you or the afterburners finish their burn. Then perform as tight a 180º turn as you can handle; if your target is within your cone of fire, open up on him.

Fishhook: Calculate the new heading you want. Turn to a heading which is at a 180º angle off that figure, then almost immediately make a 180º turn to your course of choice. For instance, if you are on a 0º course and want to make a 90º left turn, you first make a 90º *right* turn, then follow up immediately witha 180º turn.

Hard Brake: Reduce forward velocity as quickly as you can. If you brake sooner, harder, and better than your pursuer, he will overshoot you and enter your cone of fire. Open up on him.

Kickstop: Make a hard 90º turn in any direction and hold your new course for a moment. If your pursuer overshoots and doesn't turn in your wake, do a

180º spin back and open fire.

Roll: Close on your target while performing a corkscrew roll.

Shake: Also called **Zig-Zag.** Perform back-and-forth 45º evasive maneuvers while closing on a target. Varying between Shake and Roll tactics while closing is usually termed a **Shake, Rattle, and Roll.**

Sit-'n'-Kick: An evasive maneuver especially useful against large ships. Make a 90º thrn in any direction. Shut off engines and spin to face your target; open fire. Then, make another random 90º turn and hit your afterburners.

Sit-'n'-Spin: Kill your engines and perform a 360º spin, firing on any targets that enter your cone of fire. Once you've spun to your original course, re-engage engines and continue.

Tail: You all know how to tail a target ship. But don't forget: Until you're sure of your most effective tailing range, try to maintain a range of 1000 meters, the "by-the-book" range.

Tight Loop: Perform a minimum-radius turn in any direction until you resume the course you held at the beginning of the maneuver. Properly performed, this will put you behind your pursuer, or at least shake him off your tail for a moment.

Turn-'n'-Spin: This is like the Kickstop, except that you also kill engine power.

--------- 15 Years Ago ---------

On 2639.033, Kilrathi occupation forces land on the human-occupied world Enyo, put a quarter of a million human prisoners under orbital guns, and await Terran reprisals. So begins the Enyo Engagement, a tactical situation made difficult by the presence of so many hostages.

Phase One of the Enyo Engagement involves bringing in an attack force against teh Kilrathi fleet at Enyo. The attack force consists principally of *Raptor*-Class heavy fighters reconfigured to carry extra Porcupine Space Mines and practically no milssiles. The force is small enough that Kilrathi foces at Enyo are certain of victory.

The Phase One forces drop their Space Mines in one region of space near Enyo and engage the enemy. Kilrathi ships maneuver to get out of the mined region and turn their attention to destroying the invaders.

By the time the Kilrathi navigators realize that the mined region corresponds to Enyo's principal jump point, it is too late: Phase Two has begun. A single radio signal detonates all the specially-modified Porcupine mines, and moements later the remainder of the Terran fleet appears at that jump point, in the middle of the engagement.

The Terran fleet strikes first against the gunships threatening the human colonies. The enemy ships are destroyed with minimal loss of life among the colonists. Then the two fleets settle in for a pounding match.

The Enyo Engagement ends with the Kilrathi in retreat. Losses have been nearly identical between the two fleets, but the Kilrathi have been forced to abandon a strategic position.

Evasion Tactics

With that review of maneuvers fresh in our mind, let's review evasion tactivs for combat situations. Yes, aggressive tactics will let you rack up the kills... but evasive tactics will keep you alive so that you *can* rack up the kills.

Here's the situation: You have an enemy to your rear, and you're in his sights. What now?

If you have a critical target in your sights, and you *know* that your pursuer's guns are not going to crack your shell with one hit, then it's permissible - barely - for you to take that hit, drop your load, and then come around to deal with your attacker. In any case, don't do this unless you're within 2,500 meters of your target.

If you don't have that critical target in your sights, or you don't *know* that you can take a direct hit, then *evade.*

Evading involves a pretty complicated series of decisions you have to learn to make by reflex.

If you have better maneuverability than your pursuer, try a Tight Loop, Kickstop, or Fishhook. If you're hurt, though, and prefer not to mix it up, you can try to evade with a Turn-'n'-Kick or any hard turn... *if* your acceleration is better than the enemy's. If it isn't, try any number of hard turns and tolls, and hope for the best.

If your puruer has better maneuverability than you but you have superior acceleration, try a Burnout or a Hard Brake... and prepare to be very accurate with ship's weapons.

If your pursuer has better maneuverability *and* acceleration than you, you have a problem. If you want to make it a slugging match, try a Sit-'n'-Spin or Turn-'n'-Spin. If you're already hurt, try any sort of evasive maneuver you can - zig-zags, hard turns, and rolls in a succession of different directions... and pray, because you're going to need some divine intervention.

--------- 5 Years Ago ---------

Terran ground forces launching an attack on a fortified Kilrathi colonial position are routed by unexpected Kilrathi fighter-craft support. The Terrans quickly reform and advance back into Terran space, their lightly-armed transports pursued by Kilrathi warships. *TCS Tiger's Claw* is detached from its previous station and sent to the Terran fleet's path.

Tiger's Claw fights a delaying action, subsequently called Custer's Carnival, to allow the Terran fleet time to reach Terran-controlled space. Though swarmed and badly damaged by Kilrathi fighter-craft, the carrier occupies the Kilrathi forces until the Terran fleet reaches safety. The *Claw* is able to limp back into Terran space, though three-quarters of its engines are destroyed and half its pilots are listed as casualties.

Subsequently, two Gold Stars and numerous other medals are awarded to *Tiger's Claw* personnel, and the carrier spends six months in spacedock being repaired and refitted.

Last Notes

There's no sure way, no sure tactic, to keep you alive on a combat mission. You may be good, but so are the Kilrathi. Somebody's got to win, and somebody will probably die.

The Book, sneered at by up-and-coming aces, is nothing more than a manual which teaches you how to slant the odds in your favor. It says nothing more than this: "Protect your wingman and he'll protect you. Lean these tactivs and they'll improve your chances." That's all.

And just remember: You're not the only one who wants your chances to be improved. Your wingman does. Your commander does. Your family does. Ultimately, the entire Terran Confederation does. Because if we fail, our people and our planets will end up "protected" by pilots who proved themselves better than us, fliers who showed they could beat us: The warriors of the Empire of Kilrah.



Joan's Fighting Spacecraft

Vega Sector Supplement for 2654.092

This is the latest update for *Joan's Fighting Spacecraft,* specifically revised for Terran personnel in the Vega Sector. This supplement contains the latest specifications on both Terran and Kilrathi spacecraft, particularly the types of craft most commonly encountered in this sector.

All servicemen are urged to familiarize themselves with these specifications.

Computer files of this material are available in the ship's library, at >>Reference>>Technical>>Hardware>>Joan's>>.

Here is a quick guide for those of you unfamiliar with the *Joan's* system of evaluation:

Maximum Velocity/Cruise Velocity

These are the settings to which a ship's speed-governors are set. This is always a relative velocity; a ship's computer sets it relative to (a) the flagship, (b) an escorted vessel, (c) a nearby planetary body, (d) a Confederation beacon, or (e) a value derived from radar positions of all visible ships. The velocity is expressed in kilometers per second.

Acceleration

This shows the *Joan's* evaluation of the ship's acceleration rate, described as "Bad," "Poor," "Average," "Good," or "Excellent."

Maximum Yaw, Pitch, and Roll

These characteristics are expressed in degrees per second (dps).

Ship's Armor

Joan's evaluation of a ship's defensive armor is expressed in centimeters thickness of Durasteel. Fore and Aft Shield values are given in values equivalent to centimeters thickness of Durasteel.

Hornet

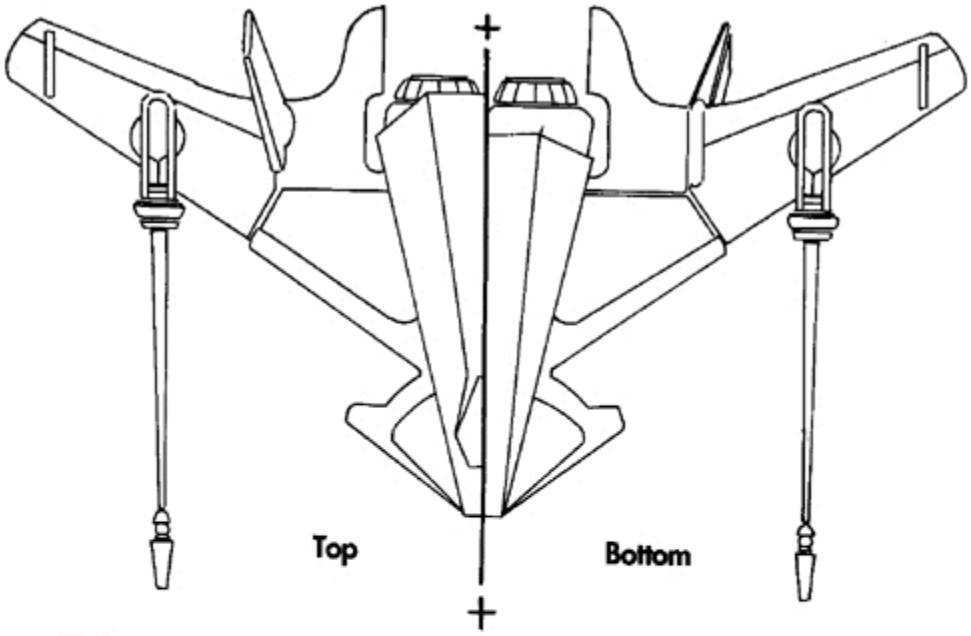

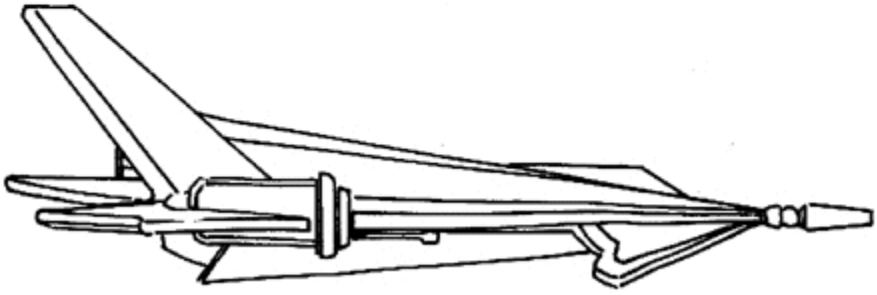

Side

Class: Light Fighter

Length: 20 Meters **Mass:** 12.5 tonnes

Maximum Velocity: 420 kps **Cruise Velocity:** 300 kps

Acceleration: Good **Maximum Yaw:** 8 dps

Maximum Pitch: 9 dps **Maximum Roll:** 8 dps

Ship's Weapons: Laser Cannon (2), Dumb-Fire Missiles (2), Heat-Seeking Missile.

Ship's Armor: Fore Shield: 3 cm equivalent; Aft Shield: 3 cm equivalent. Front: 3 cm; Right: 3cm; Left: 3cm; Rear: 3 cm.

Rapier

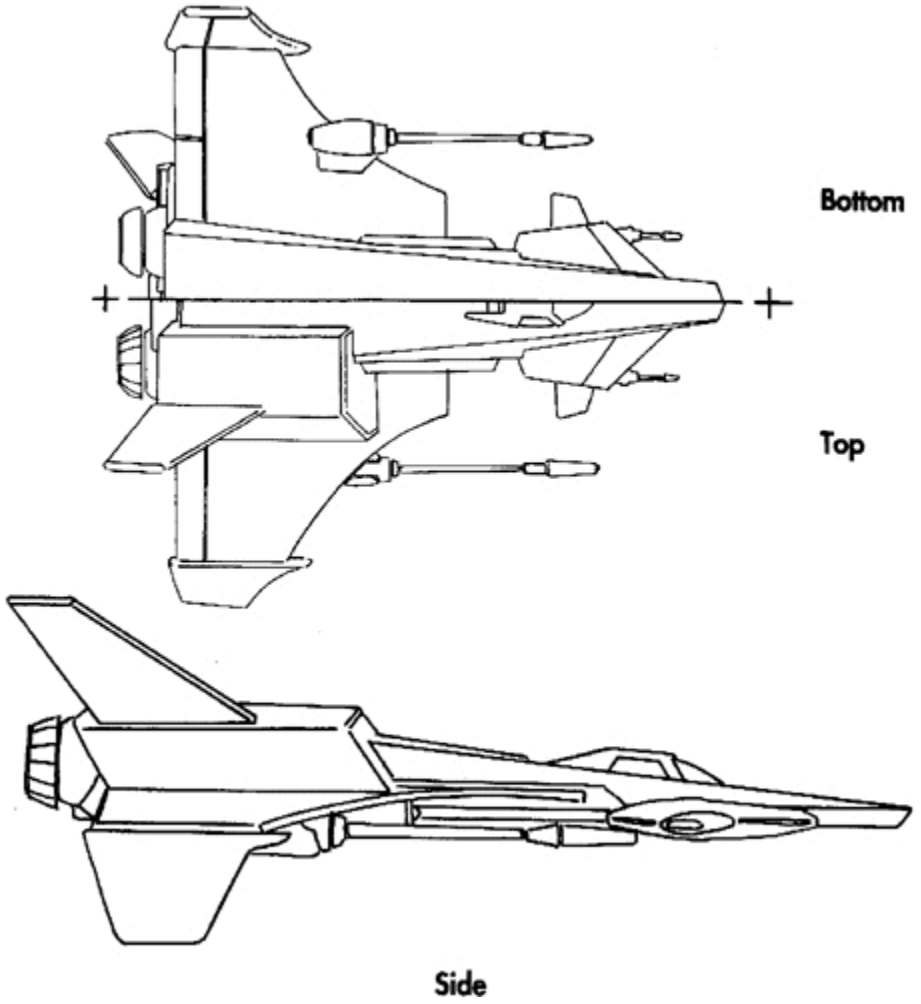

Class: Medium Fighter

Length: 24 Meters **Mass:** 13.5 tonnes

Maximum Velocity: 450 kps **Cruise Velocity:** 250 kps

Acceleration: Excellent **Maximum Yaw:** 10 dps

Maximum Pitch: 10 dps **Maximum Roll:** 10 dps

Ship's Weapons: Laser Cannon (2), Neutron Guns (2), Dumb-Fire Missiles (2), Spiculum IR (Image-Recognition) Missile, Pilum FF (Friend or Foe) Missiles (2).

Ship's Armor: Fore Shield: 7 cm equivalent; Aft Shield: 7 cm equivalent. Front: 5 cm; Right: 3cm; Left: 3cm; Rear: 4 cm

Scimitar

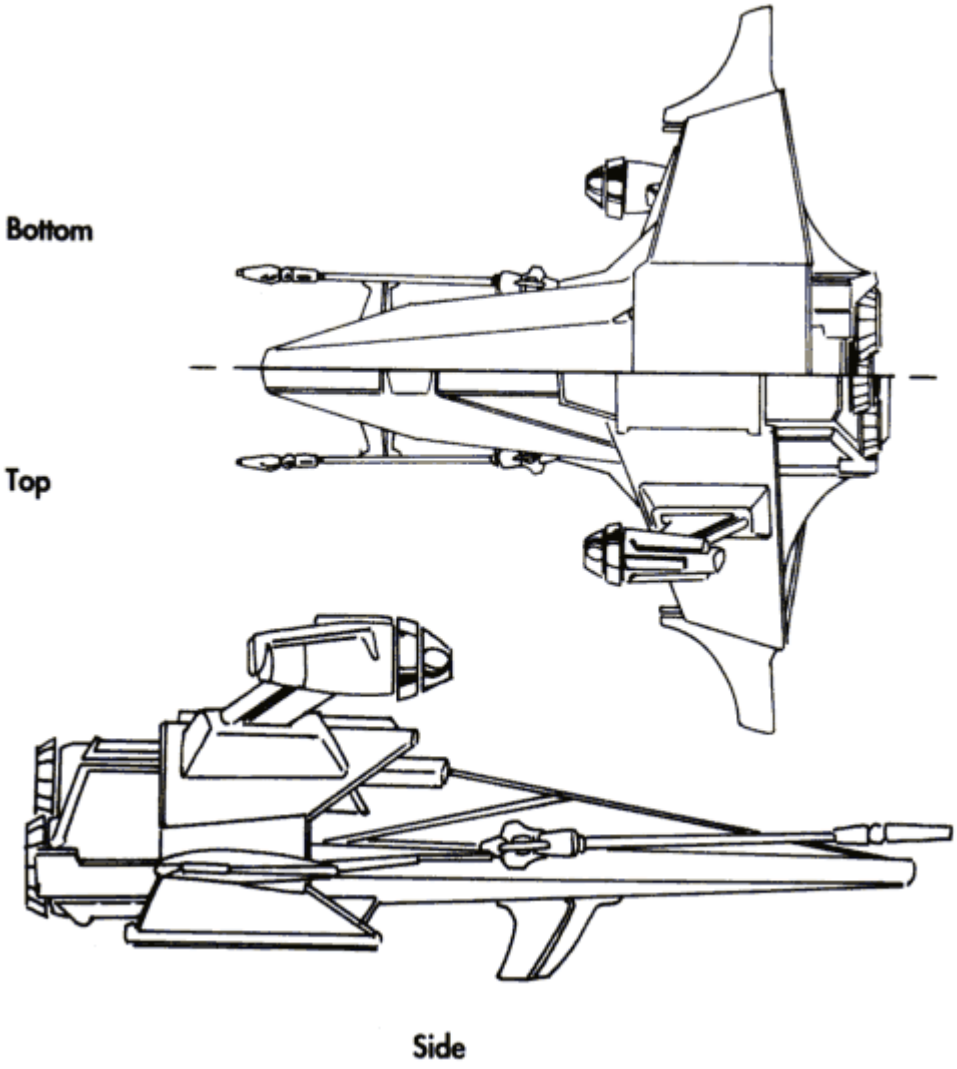

Class: Medium Fighter

Length: 25 Meters **Mass:** 16 tonnes

Maximum Velocity: 360 kps **Cruise Velocity:** 150 kps

Acceleration: Good **Maximum Yaw:** 6 dps

Maximum Pitch: 6 dps **Maximum Roll:** 7 dps

Ship's Weapons: Gatling Mass Driver Cannon (2), Dumb-Fire Missiles (2), Heat-Seeking Missiles (3).

Ship's Armor: Fore Shield: 4 cm equivalent; Aft Shield: 4 cm equivalent. Front: 6 cm; Right: 5cm; Left: 5cm; Rear: 6 cm.

Raptor

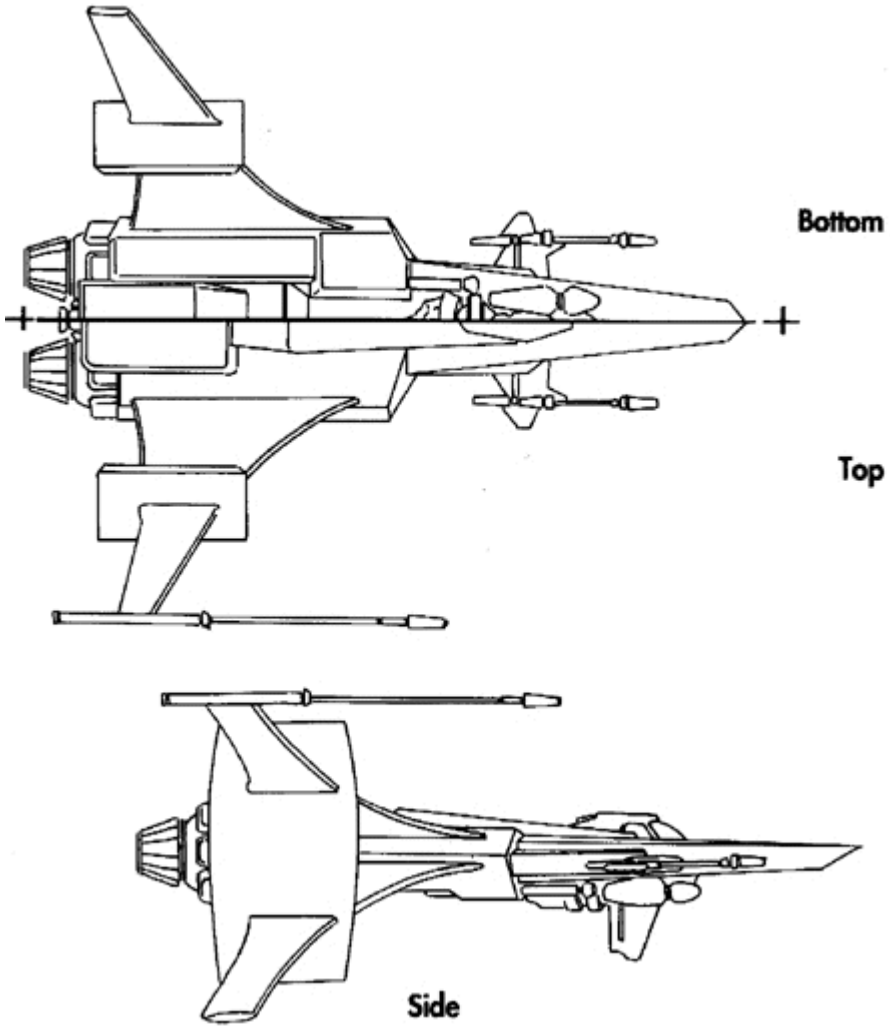

Class: Heavy Fighter

Length: 36 Meters

Mass: 20 tonnes

Maximum Velocity: 400 kps

Cruise Velocity: 250 kps

Acceleration: Good

Maximum Yaw: 6 dps

Maximum Pitch: 5 dps

Maximum Roll: 6 dps

Ship's Weapons: Neutron Guns (2), Gatling Mass Driver Cannon (2), Heat-Seeking Missiles (2), Spiculum IR (Image Recognition) Missiles (2), Pilum FF (Friend or Foe) Missile, Porupine Space Mine.

Ship's Armor: Fore Shield: 7 cm equivalent; Aft Shield: 7 cm equivalent. Front: 8 cm; Right: 6cm; Left: 6cm; Rear: 8 cm.

Venture

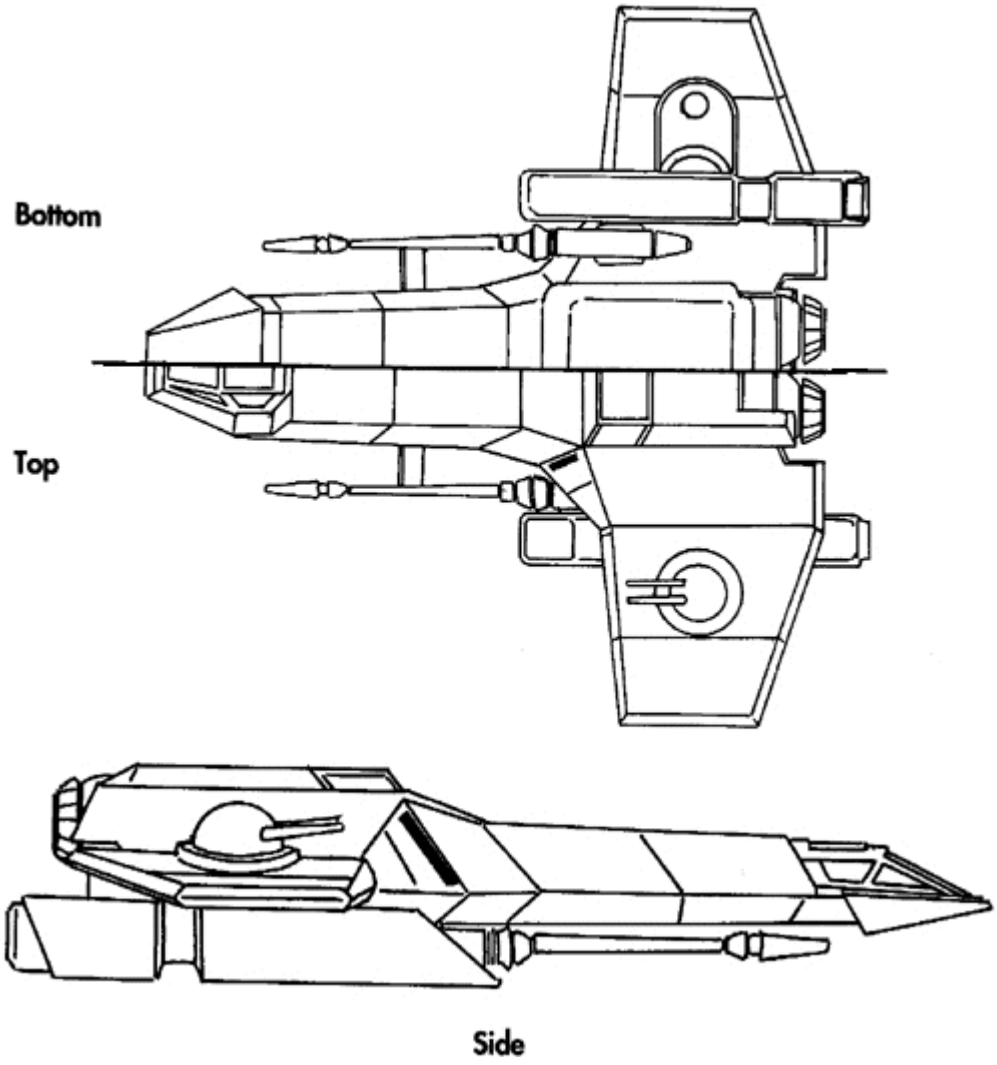

Class: Corvette

Length: 80 Meters
Mass: 1,000 tonnes
Maximum Velocity: 200 kps
Cruise Velocity: 150 kps
Acceleration: Poor
Maximum Yaw: 3 dps
Maximum Pitch: 3 dps
Maximum Roll: 3 dps

Ship's Weapons: Laser Cannon (2), Pilum FF (Friend or Foe) Missile, Heat-Seeking Missiles (2).

Ship's Armor: Fore Shield: 10 cm equivalent; Aft Shield: 10 cm equivalent. Front: 9 cm; Right: 8 cm; Left: 8 cm; Rear: 8 cm.

Drayman

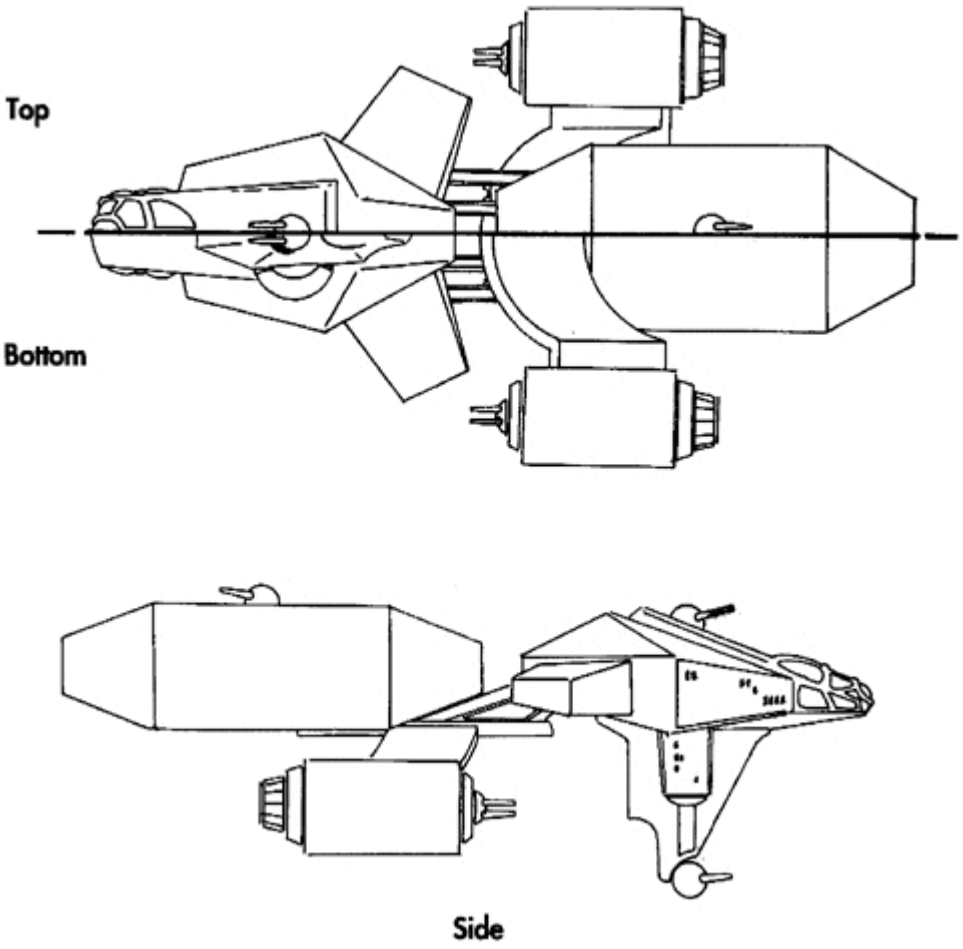

Class: Transport (configurable as either Freighter or Tanker)

Length: 96 Meters
Mass: 2,000 tonnes
Maximum Velocity: 150 kps
Cruise Velocity: 100 kps
Acceleration: Bad
Maximum Yaw: 2 dps
Maximum Pitch: 2 dps
Maximum Roll: 2 dps
Ship's Weapons: Classified
Ship's Armor: Fore Shield: 9 cm equivalent; Aft Shield: 9 cm equivalent. Front: 8 cm; Right: 6 cm; Left: 6 cm; Rear: 8 cm.

Exeter

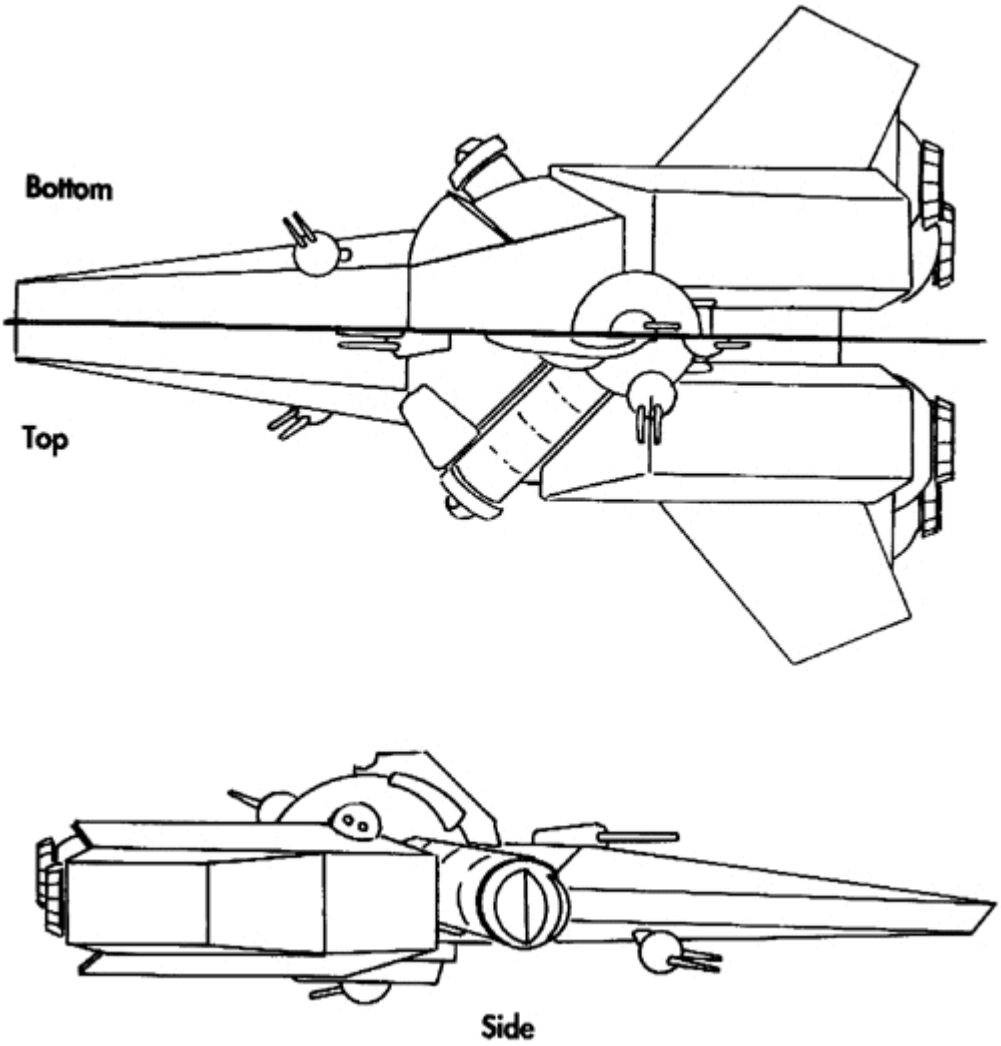

Class: Destroyer

Length: 360 Meters

Mass: 8,000 tonnes

Maximum Velocity: 150 kps

Cruise Velocity: 100 kps

Acceleration: Poor

Maximum Yaw: 2 dps

Maximum Pitch: 2 dps

Maximum Roll: 2 dps

Ship's Weapons: Classified

Ship's Armor: Fore Shield: 25 cm equivalent; Aft Shield: 25 cm equivalent. Front: 22 cm; Right: 20 cm; Left: 20 cm; Rear: 20 cm

Tiger's Claw

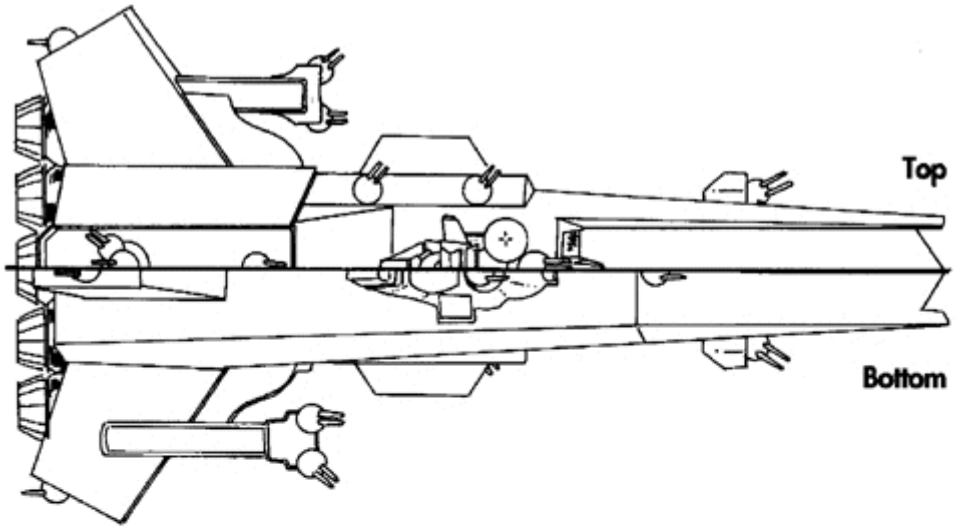

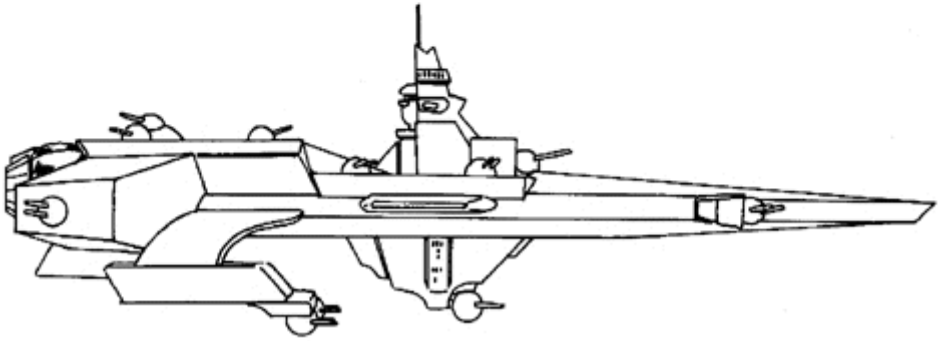

Side

Class: *Bengal* - Strike Carrier

Length: 700 Meters **Mass:** 80,000 tonnes

Maximum Velocity: 130 kps **Cruise Velocity:** 100 kps

Acceleration: Poor **Maximum Yaw:** 1 dps

Maximum Pitch: 1 dps **Maximum Roll:** 1 dps

Ship's Weapons: Dual Laser Turrets (8)

Ship's Armor: Fore Shield: 21 cm equivalent; Aft Shield: 21 cm equivalent. Front: 24 cm; Right: 25 cm; Left: 25 cm; Rear: 20 cm.

Fighter Complement: 104.

Salthi

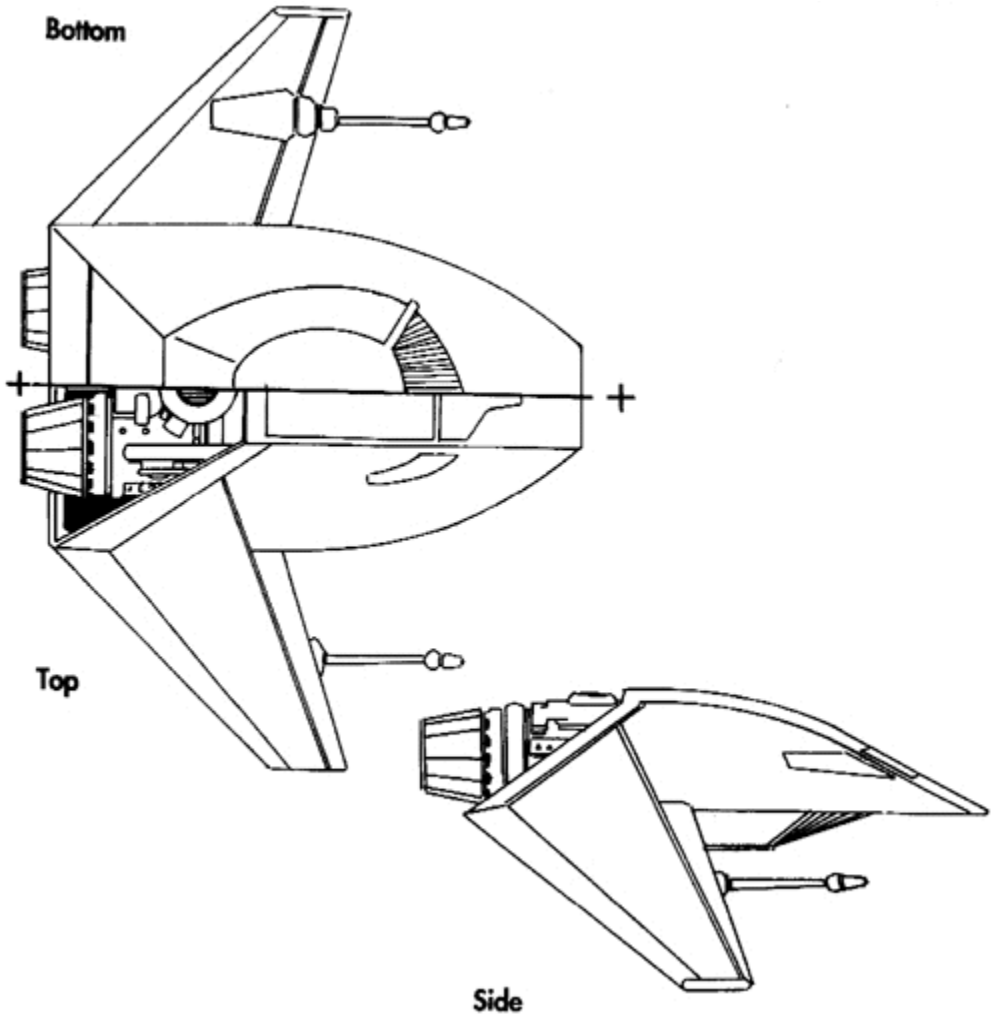

Class: Light Fighter
Length: 24 Meters **Mass:** 12 tonnes
Maximum Velocity: 480 kps **Cruise Velocity:** 300 kps
Acceleration: Excellent **Maximum Yaw:** 14 dps
Maximum Pitch: 12 dps **Maximum Roll:** 12 dps
Ship's Weapons: Laser Cannon (2), Dumb-Fire Missile.
Ship's Armor: Fore Shield: 3.5 cm equivalent; Aft

Dralthi

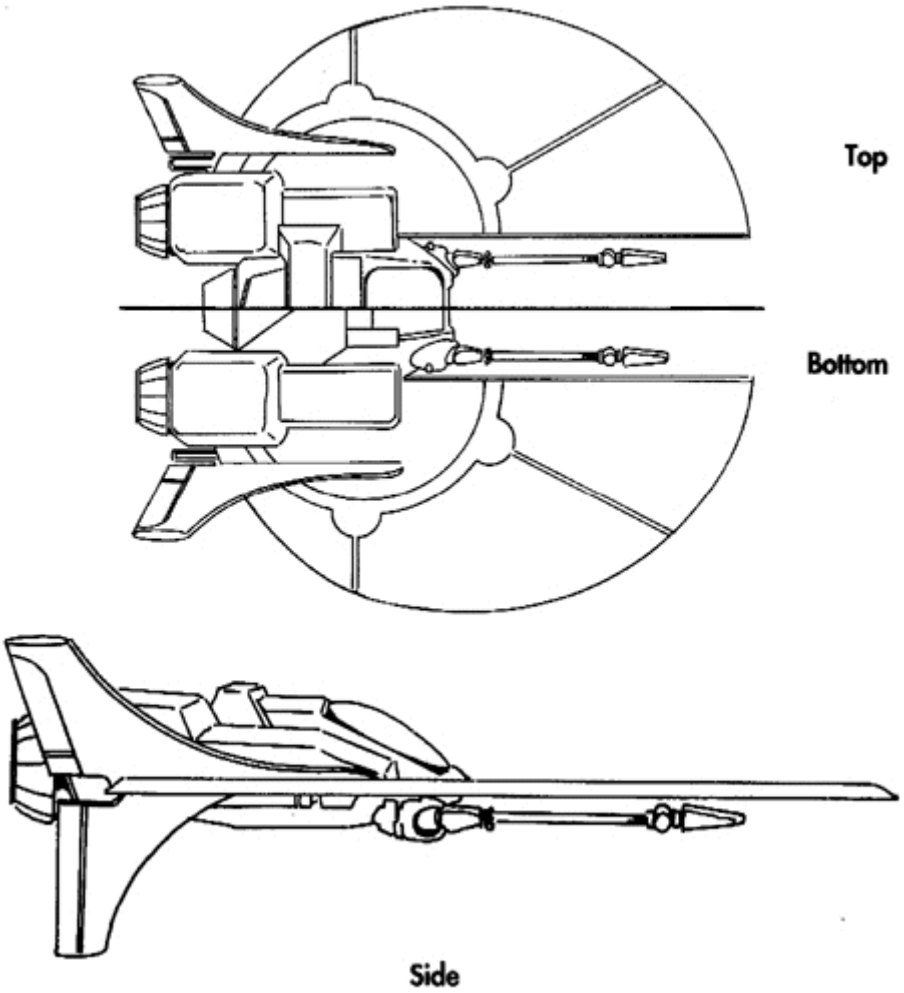

Class: Medium Fighter

Length: 28 Meters **Mass:** 14 tonnes

Maximum Velocity: 400 kps **Cruise Velocity:** 230 kps

Acceleration: Good **Maximum Yaw:** 10 dps

Maximum Pitch: 14 dps **Maximum Roll:** 10 dps

Ship's Weapons: Laser Cannon (2), Porcupine Mines (3), Heat-Seeking Missiles (2).

Ship's Armor: Fore Shield: 5 cm equivalent; Aft Shield: 5 cm equivalent. Front: 4.5 cm; Right: 3 cm; Left: 3 cm; Rear: 3.5 cm.

Krant

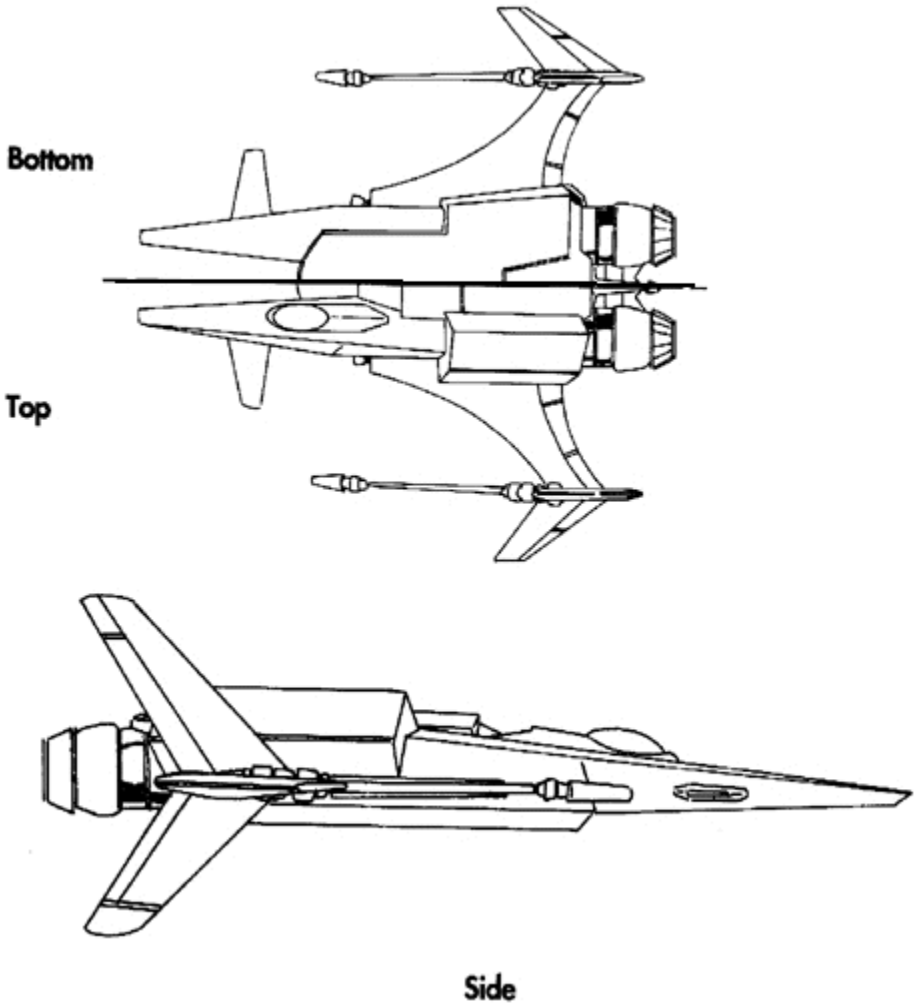

Class: Medium Fighter

Length: 32 Meters **Mass:** 16.6 tonnes

Maximum Velocity: 360 kps **Cruise Velocity:** 200 kps

Acceleration: Good **Maximum Yaw:** 7 dps

Maximum Pitch: 10 dps **Maximum Roll:** 7 dps

Ship's Weapons: Laser Cannon (2), Friend or Foe Missile, Heat-Seeking Missiles (3).

Ship's Armor: Fore Shield: 8 cm equivalent; Aft Shield: 8 cm equivalent. Front: 9 cm; Right: 8 cm; Left: 8 cm; Rear: 10 cm.

Gratha

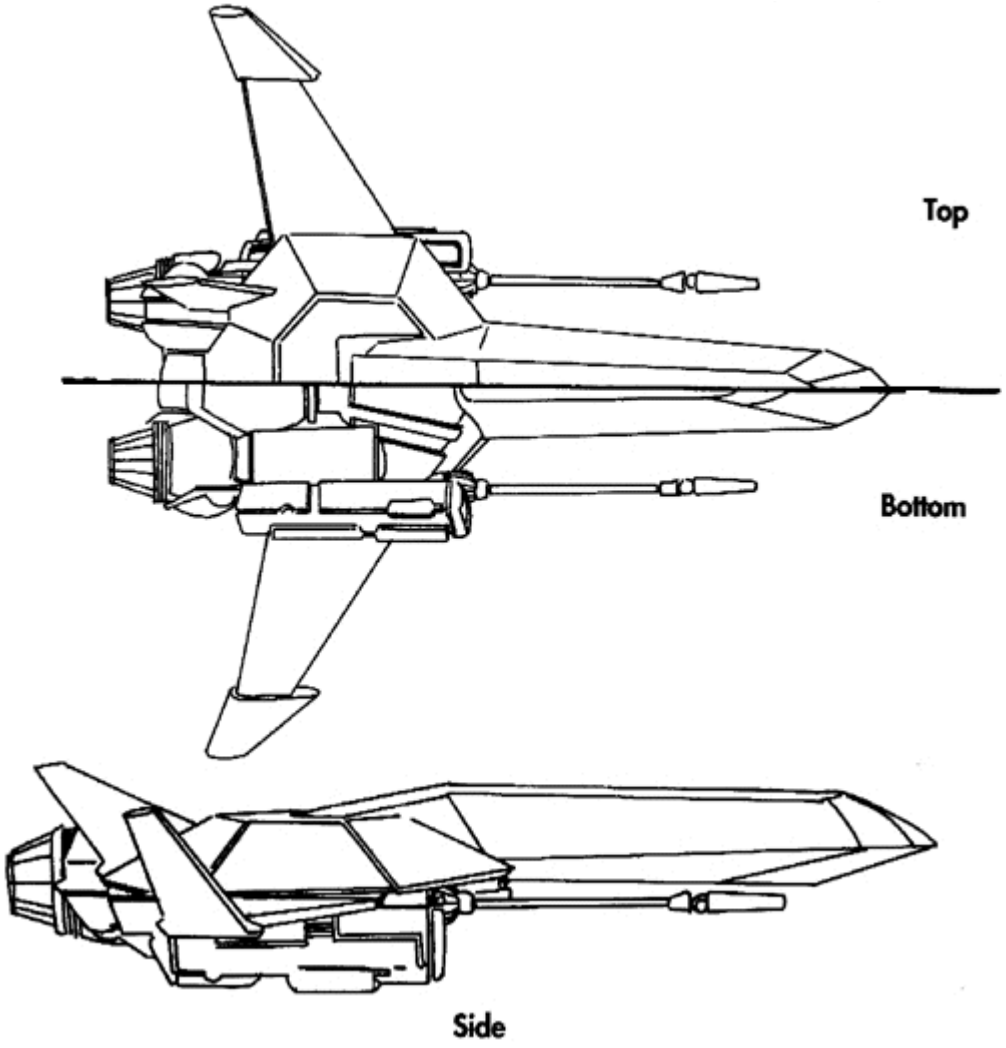

Class: Heavy Fighter

Length: 36 Meters **Mass:** 18 tonnes

Maximum Velocity: 320 kps **Cruise Velocity:** 200 kps

Acceleration: Average **Maximum Yaw:** 6 dps

Maximum Pitch: 6 dps **Maximum Roll:** 6 dps

Ship's Weapons: Laser Cannon (2), Mass Driver Cannon (2), Image Recognition Missile, Heat-Seeking Missiles (3), Porcupine Mines (2).

Ship's Armor: Fore Shield: 11 cm equivalent; Aft Shield: 10 cm equivalent. Front: 15 cm; Right: 10 cm; Left: 10 cm; Rear: 14 cm.

Jalthi

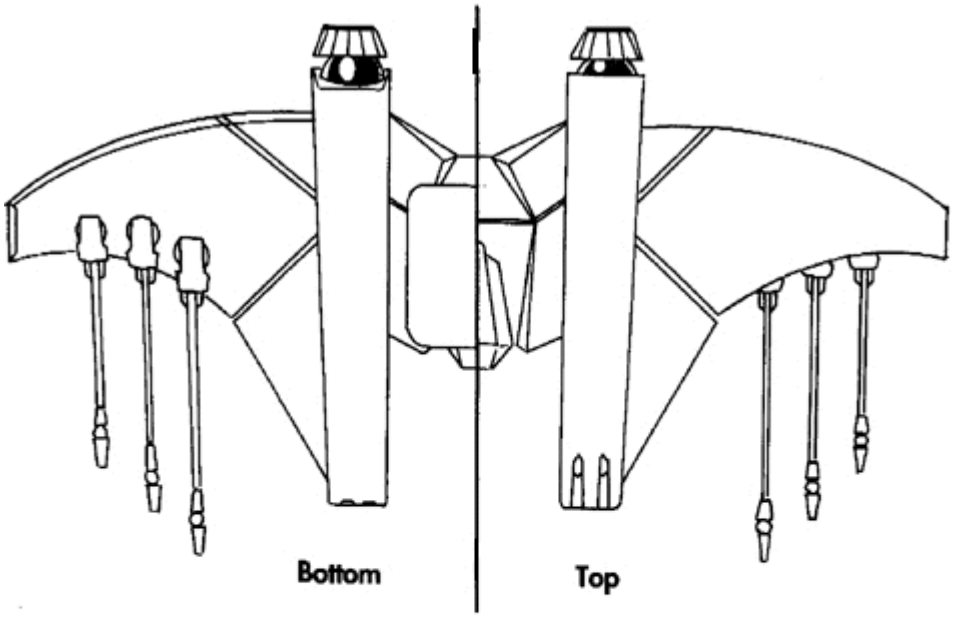

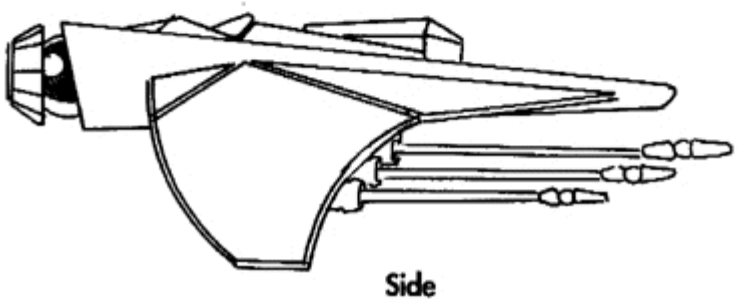

Class: Heavy Fighter

Length: 32 Meters **Mass:** 22 tonnes

Maximum Velocity: 280 kps **Cruise Velocity:** 200 kps

Acceleration: Average **Maximum Yaw:** 5 dps

Maximum Pitch: 5 dps **Maximum Roll:** 5 dps

Ship's Weapons: Neutron Guns (3), Friend or Foe Missiles (2), Heat-Seeking Missiles (3), Laser Cannon (3).

Ship's Armor: Fore Shield: 16 cm equivalent; Aft Shield: 16 cm equivalent. Front: 20 cm; Right: 17 cm; Left: 17 cm; Rear: 10 cm.

Dorkir

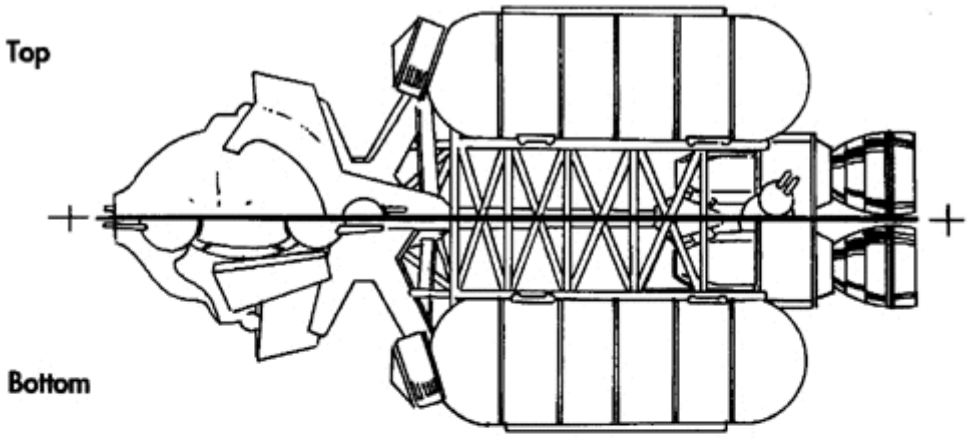

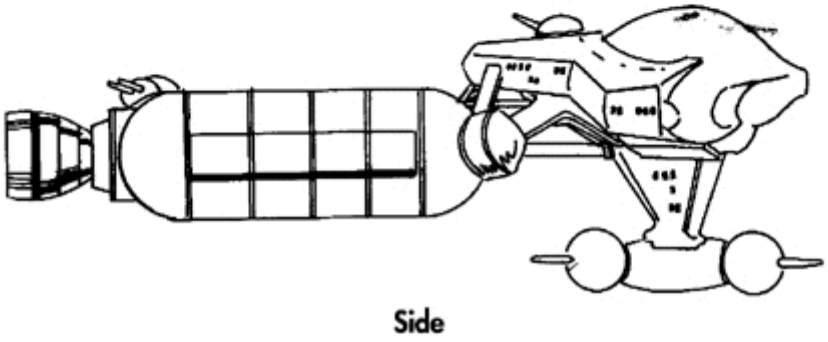

Class: Transport (configurable as either Freighter or Tanker)

Length: 104 Meters
Mass: 2,000 tonnes
Maximum Velocity: 150 kps
Cruise Velocity: 100 kps
Acceleration: Bad
Maximum Yaw: 2 dps
Maximum Pitch: 2 dps
Maximum Roll: 2 dps

Ship's Weapons: Turreted Laser, Porcupine Mines (3)

Ship's Armor: Fore Shield: 17 cm equivalent; Aft Shield: 10 cm equivalent. Front: 9 cm; Right: 9 cm; Left: 9 cm; Rear: 6 cm.

Ralari

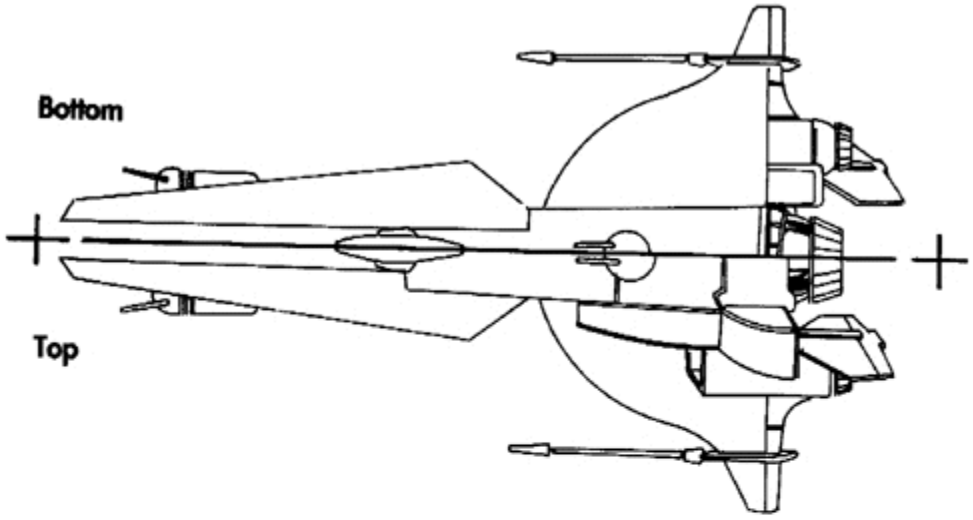

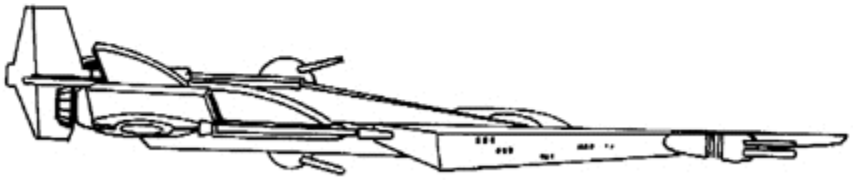

Side

Class: Destroyer
Length: 344 Meters
Mass: 18,000 tonnes
Maximum Velocity: 150 kps
Cruise Velocity: 100 kps
Acceleration: Poor
Maximum Yaw: 2 dps
Maximum Pitch: 2 dps
Maximum Roll: 2 dps
Ship's Weapons: Turreted Lasers (6), Porcupine Mine.
Ship's Armor: Fore Shield: 20 cm equivalent; Aft Shield: 12 cm equivalent. Front: 20 cm; Right: 18 cm; Left: 18 cm; Rear: 6 cm.

Fralthi

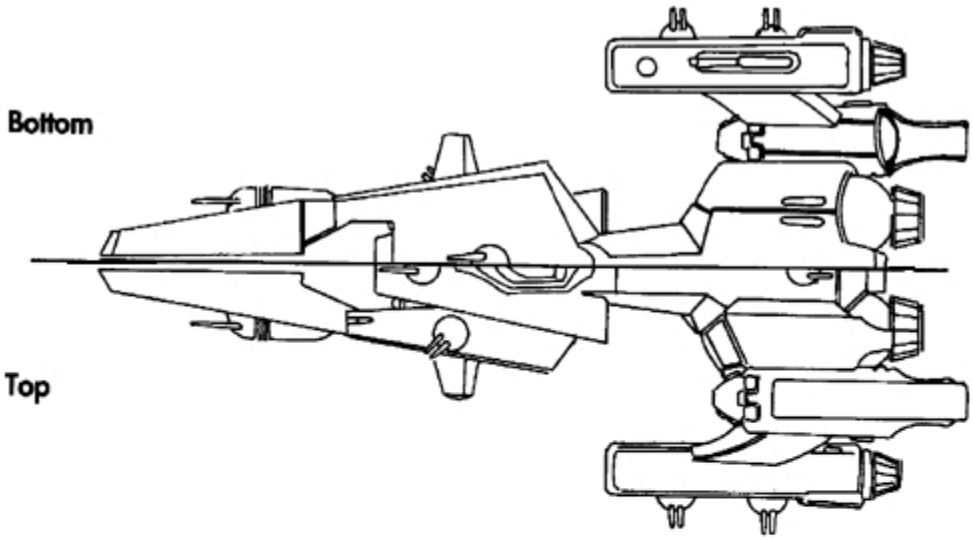

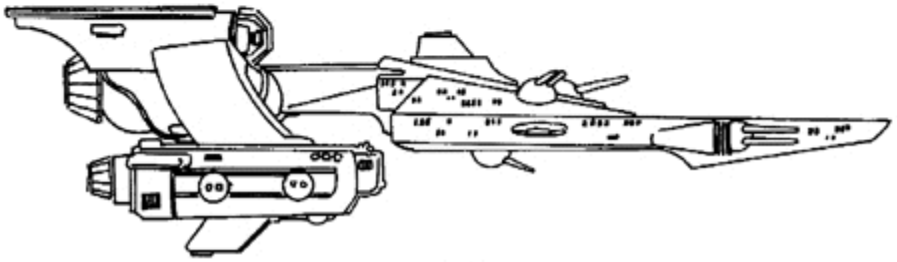

Class: Cruiser

Length: 500 Meters
Mass: 20,000 tonnes
Maximum Velocity: 180 kps
Cruise Velocity: 120 kps
Acceleration: Poor
Maximum Yaw: 2 dps
Maximum Pitch: 2 dps
Maximum Roll: 2 dps

Ship's Weapons: Turreted Lasers (6).

Ship's Armor: Fore Shield: 27 cm equivalent; Aft Shield: 17 cm equivalent. Front: 28 cm; Right: 26 cm; Left: 26 cm; Rear: 14 cm.

Fighter Complement: 20.

WEAPONS *of the Terran and Kilrathi Fleets*

What Joan's does for ships, Ivan Borger does for weapons systems. The following excerpt from *Borger's All The Sector's Weapons Systems* is presented as a crash course for those new to the fighting front.



Dumb-Fire Missile - The Dumb-Fire missile is a point-and-shoot weapon - just aim it at a target and hope the target can't get out of the way. With no homing capability, the Dumb-Fire is most effective in the hands of a pilot who can anticipate the target's reactions. When possible, it should be reserved for use in close quarters or against slow-moving targets.

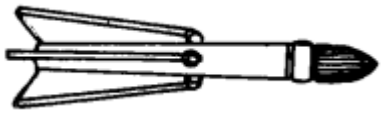

Heat-Seeking Missile - The engines of a modern space fighter or capital ship generate a lot of heat, a fact the heat-seeking missile uses to great advantage. All a pilot has to do is park himself on an enemy's tail, wait for the heat-seeker to lock, and then fire. (NOTE: If the target shakes a heat seeker, the missile locks onto the nearest heat source, perhaps even the ship that originally fired it!)

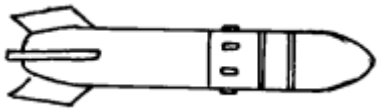

Image Recognition Missile - To fire an image recognition missile, the pilot must keep the target in view for several seconds, after which the missile memorizes the ship type in the pilot's sights. Once the image recognition missile locks it doesn't let go - it tracks the targeted ship like a very lethal bloodhound...

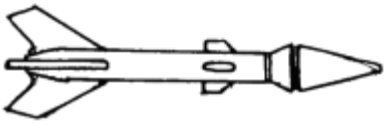

Friend or Foe Missile - The friend or foe missile locks onto the nearest enemy ship. Capable of identifying the distinctive signal broadcast by all Terran ships, the friend or foe makes a beeline for the nearest ship that isn't broadcasting. (NOTE: This weapon will target friendly ships whose communications systems are damaged. Even the firing ship is not safe!)

Laser Cannon - Lasers don't do a lot of damage. Still, nearly all pilots have at least one story in which the long range of the laser allowed them to get first strike on a foe. Despite their low damage potential, lasers are reliable, versatile, and effective - they have probably accounted for more enemy kills than any other weapon.

Neutron Guns - Neutron guns do heavy damage, but only at close range. No other projectile weapon provides an equivalent level of destructive capability. The down side is that neutron guns heat up rapidly and eat up power at an alarming rate. Also, the neutron gun's lack of range has led many fool-hardy or underskilled pilots into close-quarter combat for which they were ill-prepared. Some of those pilots never made it home.

Mass Driver Cannon - The basic fighter weapon - medium range, medium damage, nothing special. The mass driver cannon is reliable and accurate. Heat build-up and power drain are minimal. Though lasers and neutron guns are more effective in certain situations, no pilot ever went wrong activating a mass driver.

Porcupine Mines - These deadly devices have limited homing capability and built-in proximity sensors - detonation doesn't require contact. If there's a Kilrathi on your tail, just open your rear doors and drop a Porcupine in his path. He'll be off your tail in no time. Or he'll be dead... If you ever see one of these irregular spheres tumbling your way, punch the throttle and steer clear.

Flak Guns - Fighters provide the bulk of a capital ship's defense, but the largest ships in the Therran and Kilrathi fleets lay down heavy flak barrages which can bring down and ship in space.

Turreted Lasers - Terran and Kilrathi destroyers, cruisers, dreadnaughts, carriers, and bases are equipped with heavy, turreted lasers linked to advanced targeting systems. Only the most maneuverable ships have any chance of surviving concentrated fire from these formidable weapons.

Pilot Profiles...

The Unstoppable Force



1st Lt. Tanaka Marike goes by the tag of *Spirit* - a rough translation of *Kami*, as she's called by the Japanese pilot instructors responsible for her initial training. In the cockpit, Spirit is known for her deceptive, defensive piloting, her abiliity to sense and avoid incoming fire, and her habit of creeping in as close as possible to a target before cutting loose with ship's weaponry.

A native of Sapporo on the Japanese island of Hokkaido, Tanaka is a third-generation military pilot. Her father, Major Tanaka Shun (affectionately remembered as *Go-Devil*), died twenty years ago in the brutal McAuliffe Ambush of '34.

The 24-year-old ace explains, "I did not join the armed forces for revenge. I have no fantasies of personally gunning down the pilot who killed my father. It is a matter of tradition and duty. The tradition is my family's, and the duty is to the Earth...I am often asked if I think of myself as a modern *samurai*. The answer is no. I am a military pilot, not a feudal retainer. But there is nothing to keep a modern pilot, Japanese or not, from trying to adhere to the best elements of the warrier-codes of the past: The code of the samurai, the code of the knight-errant, any code of honor and service.

Loose Cannon On Deck



Captain Ian St. John, or *Hunter* to the spacecrews, is one of the best pilots in the service, and has racked up an impressive number of kills in the years he has been stationed on the *Tiger's Claw*. He's known as a seat-of-the-pants flier, and Kilrathi opponenets tend to be baffled by his unpredictable, spontaneous flying style.

The 27-year-old native of Brisbane, Australia is sometimes accused of excessive independence and a casual attitude toward regulations. "Maybe so," he explains, "but I'd never leave my wingleader hanging. However, every [expletive deleted] thing we're given - ships, weapons, training, an' standing regs - is there for us to push to the limit, an' maybe a little further, if we're going to get the job done. Notice I say 'push to the limit' an' not 'break.' Maybe there's not much of a difference, but it's usually *the* difference between dusting a furball an' sucking vacuum."

Leader By Example



Major Chen Kien is known as *Bossman* to the spacecrews, but that wasn't always the case, "When I was young - er, younger - they called me *Ripper*; my old friends still do. I was a lot like Hunter, pushing everything to the limit. But I might have been a little too good, or at least lucky, at it. Replacement crews coming in, bright young second looies, took my lead... and got themselves shot to hell. When I started burying young pilots who had been killed for behaving like me, I decided to give them an example that would not get them blown out of space. It is sort of a visious cycle: You try to act as an example, and young pilots start coming to you for advice. That is when they started calling me Bossman. I do not regret all these changes... but there are times I miss the old days."

The 39-year-old native of Kaohsiung, Taiwan, has a degree in aeronautical engineering from the Confederation Net university system. He is married to ergonomics engineer Chen Mingxing and, last March, became the father of a baby girl.

Ace of Aces



Major Michael Casey, or *Iceman* to the crews, has racked up more confirmed kills while serving on the *Tiger's Claw* than any other pilot in the carrier's history. In the cockpit, he is known for calm under fire, letter-perfect flying technique, and deadly aim with ship's weapons, a combination which guarantees disaster for Kilrathi opponents.

Angel, frequent wingman for Iceman, describes flying with him: "You must learn to listen for Iceman. On the comm unit, in a large engagement, everyone is either shouting or at least very excitable; Iceman is *whispering*. You have to strain your ears to hear him. It's always terse little statements: 'Moving in.' 'Rolling right.' 'Target in sight.' 'Objective accomplished.' 'Head for home.' And I will tell you: He talks ten times as much in the cockpit as he ever talks on the carrier." Iceman is 31, a native of Vancouver, British Columbia.

By the Book — Or Else



"I cannot stand 'rebels,' or hot-doggers, or any of these so-called intuitive know it alls," explains Captain Jeannette Devereaux, who goes by the cockpit moniker of *Angel*. "We have used flying craft in warefare since 1914. As a race, we have nearly *eight centuries* of combat flying experience, and we've had nearly eaight centuries to define, refine, and perfect the rules by which we fly. These are rules designed to keep us alive, keep our wingmen alive, and win our wars, *n'est-ce pas?*

"But every class that comes out of the Academy is stuffed full of these talented fliers who think that, because they can do new and interesting things with their machines, they must be smarter than eight centuries of military thinkers... and so the rules don't apply to them. They shut up fast when they start seeing their classmates eat missiles... and it is at *that* point they join the human race and begin to contribute to winning this war."

The 28-year-old Devereaux is a native of Brussels, Belgium. She is widely known for her marksmanship: Her accomplishments with ship's weapons dot the *Tiger's Claw* performance records.

New Kid on the Block



Fresh from the Academy is 2nd Lt. Todd Marshall, known as *Maniac* by his graduating class.

Marshall, 23, tries hard to live up to his moniker. "Plodding along with your joystick in one hand and a copy of the naval regs in the other is not going to impress the Kilrathi," he says. "They know our regs. They know the Book, they know how we do things. If we're going to put them on the ropes, we have to adapt our rules, tactics, and flying styles. We have to outfly them, outfight them... we've got to *want* it more. And I want it.

"I'm a Proxie - homeworld Leto, Proxima Centauri IV. When the colonization started, anyone with any brains or skills high tailed it off Earth, and most of them ended up on Leto. That's why Proxies kick homeborn Terrans around in the ratings."

Despite his creative interpretation of colonial history and comparative Naval Academy standings, Marshall was one of the highest-rated Academy graduates in the '54 class and promises to be a worthy addition to the *Tiger's Class* pilot roster.

A Professional's Professional

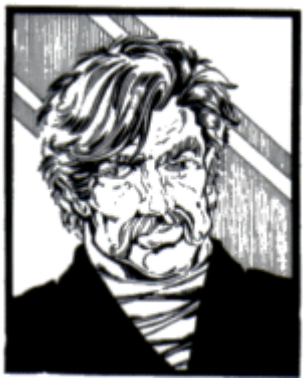

"The laddies coming out of the Academy think I was born old," says Major James Taggart, who is known as *Paladin* to the spacecrews. "But when I took my commission - not too long after we *discovered* the Empire of Kilrah - I was just a kid. I was charged up on stories of knight-errantry, on *The Death of Arthur* and *The Song of Roland*. So when we ran into the Kilrathi, I knew I was going to grab up a lance, hop into a cockpit, and change the course of history. Naturally," he jokes, "I did."

Taggart, 45, is a native of Ares, the self-sufficient space station built in permanent orbit around the planet Venus; his parents were terraforming engineers from Wick, Scotland.

Though an effective wingleader, Taggart is especialy appreciated for whis wingman skills. He has a reputation for protectiveness when flying wing. On an average of three times a year, pranksters get to his space-craft, scrape the name "Paladin" from his cockpit and replace it with "Mother Hen"

"Appreciate it while you can," he grins. "Combat flying is a young man's game, and I'm having trouble convincing the medics that I'm still 25. I'll be flying a desk before too long... if I can find one with afterburners and smart missiles."

Know Your Fighter Qualification Ribbons

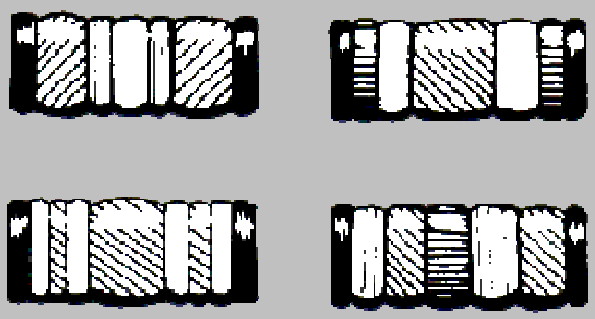

If you can't tell a Rapier from a Raptor at a distance, you probably can't tell them apart on their Fighter Qualification Ribbons, either. Try your recognition skills on the Fighter Qualification Ribbons above. Each is awarded when you've completed your first mission in that class of fighter. Clockwise, from upper left:

Hornet ▪ *Scimitar* ▪ *Raptor* ▪ *Rapier*

Reliability Under Fire



Captain Joseph Khumalo, known to the crews as *Knight*, admits that his piloting accomplishments don't dot the record books. "I'm not a cockpit genius like Hunter or a marksman like Angel. I'm an ordinary man. I'm a pilot. It's my job."

Yet wingleaders tend to breathe a sigh of relief when they draw Khumalo as wingman. Knight has a reputation of utter reliability in combat. "I got my nickname in the Enyo Engagement. The Kilrathi were swarming like flies. I was a second looie assigned as wingman to Captain Maria 'la Doña' Alvarez. We were hugging the deck of this transport and strafing it, did a tight turn going from its back to its belly, and ran right through a swarm of fighters headed the other way. And defensive maneuvering in those quarters would've cut me off from la Donña, so I just fired as fast as I could, and got lucky: I was an ace coming out of that pack, and had picked off a couple of fighters going after my wingleader. La Doña put on her thickest accent and said, 'Ooh, eet's my White Knight,' and the name stuck.

"But, honestly, I don't feel that way, I'm not a knight-errant. I'm a soldier. Not all of us can be geniuses... but I'm going to do the best I can with what I can," Khumalo, 36, hails from Kroonstad, South Africa.

Know Your Ranks

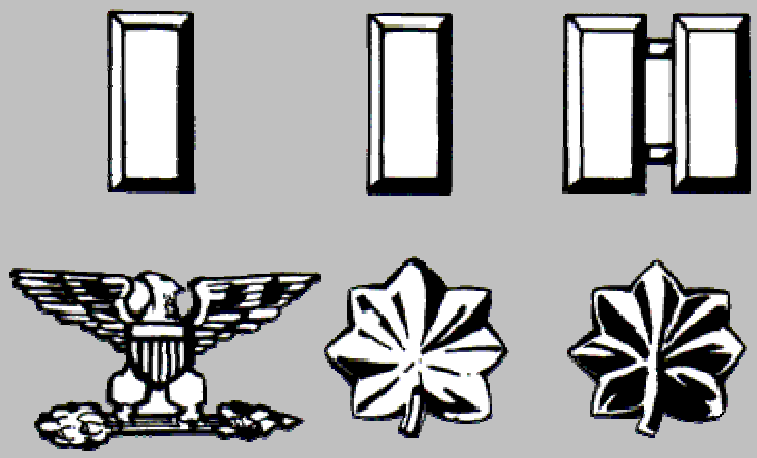

If you can't tell a major from a lieutenant colonel without having to look, you'll sooner or later find yourself in a humiliating conversation with a superior officer. Learn these rank insignia so well that you can identify them out of the corner of your eye at fifty paces. Clockwise from upper left, they are:

2nd Lieutenant ▪ 1st Lieutenant ▪ Captain ▪ Major ▪ Lieutenant Colonel ▪ Colonel

Keen Competitor



Best-known among the Kilrathi aces is Bhurak, called Bhurak Starkiller. He is regarded as the best living pilot among the Kilrathi in this sector. He flies a *Salthi*-Class Light Fighter.

Strengths: Bhurak's an excellent pilot and shot. He has optimal reflexes and there are no serious weaknesses to be detected in his flying style.

Weaknesses: Psych profiles indicate that Bhurak is probably addicted to speed, thrills, and sport. Though a courageous pilot, he is not without a survival instinct: A sufficient number of opponents or a sudden turn in fortune could panic him into retreat.

Tactics: Bhurak likes the dogfight. He prefers a maneuverable foe and standard dogfight tactics. He almost always uses his ship's laser cannon, reserving his standard dumb-fire missile for stationary targets.

Recommendation: If possible, put several pilots on him at once; deny him a fair fight or anything he would consider fun. He might become disgruntled and choose another target, or rout. If you're forced into single combat with him, don't try to outfly him: You might do best by going stationary, spinning to keep him in your sights, and trading licks. He doesn't appear to consider that fun and may choose a new objective.

Cold as Vacuum



Khajja the Fang is not-so-affectionately called "the Machine" by Terran intelligence. He is the most efficient, mission-oriented pilot the Kilrathi have. He pilots a *Krant*-Class Medium Fighter.

Strengths: Khajja's greatest asset is his clear thinking. He never panics or falters and appears to have utter confidence in his wingmen. He is not vulnerable to taunts, goads, or insults

Weaknesses: Khajja's faith in his wingmen may be misplaced. Analysis indicates that some Kilrathi pilots may be afraid of him. He will single-mindedly ignore incoming ships in order to concentrate on a strike objective, meaning that he might ignore *you*.

Tactics: Khajja prefers straight-in, straight-out strafing approaches. He uses his laser cannon for most encounters, saves his heat-seekers for mission objectives or particularly troublesome enemies, and saves his friend or foe missiles for emergencies.

Recommendation: If he's approaching a mission objective, you might get a free shot by eluding his wingmen. If he's moving in on you, utilize classic dogfight tactics: Try to outfly and outshoot him, or lead him toward unengaged friendlies. He doesn't like bad odds.

Extreme Prejudice



Dakhath, whose name translates literally as Deathstroke, is one of the most dangerous pilots alive. According to our (incomplete) records, he has 55+ confirmed kills on file. He pilots a *Dralthi*-Class Medium Fighter.

Strengths: Dakhath appears to be utterly without fear. He never retreats from an engagement until every enemy within 1,000 klicks is destroyed, and will not abandon a wounded enemy until that enemy is destroyed. This courage and lack of self-preservation instincts make him particularly dangerous. So does his apparent affection for inflicting pain.

Weaknesses: Dakhath lives only to kill and will not retreat or change targets until his first target is dead. If at all possible, use his single-mindedness against him... if only by leading him away from a strategically-important target so that he can concentrate on *you*.

Tactics: Dakhath launches his missiles at maximum range (he appears to like explosions), then closes for the kill on one target. He will cling to that target until he destroys it, then choose another, as methodical as clock circuits.

Recommendation: It might be possible to lead him into the path of fire friendly to you, and is equally possible that he won't notice new pursuit on him until it's too late. *(Important Note:* If your ship takes a lot of damage and looks shaky, do not eject if you're in the vacinity of Dakhath. One of his hobbies is target practice against ejecting pilots.)

Know Your Performance Service Ribbons

Earn one of these and you'll know you're one of the elite pilots in the Terran Confederation Navy, Clockwise, from upper left:

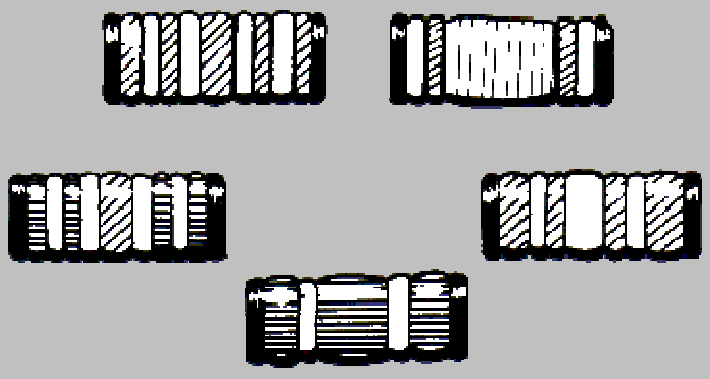

Ace: Awarded for five confirmed kills.
Ace of Aces: Awarded for 25 confirmed kills.
5-. 10-. 15-Mission Ribbons: Earned after completing indicated number of missions.

Danger and Disdain



Bakhtosh Redclaw is a rash on the comm units; he is best-known for extremely sarcastic gloating during combat engagements. It appears that he belongs to an aristocratic Kilrathi family and has been trained in the politics of superiority from birth. He flies a *Jalthi*-Class Heavy Fighter.

Strengths: Bakhtosh is the best Kilrathi shot in Vega Sector, bar none. His accuracy with ship's guns is becoming legendary even among Terran pilots, which is another strength: Some Terrans feel intimidated when confronting the legendary Bakhtosh, and conseqquently their flying suffers. Additionally, he is a master of the crowning insult, the patronizing remark, and the racial slur. He often goads Terran fighters into bad tactical errors.

Weaknesses: Bakhtosh's piloting is nothing special. Like one legendary figure of Terran combat aviation, the Red Baron, he is an excellent marksman but a mediocre flier. Additionally, his insults and better-than-thou attitude are *not* a pose; he believes himself to be superior to all Kilrathi as well as all humans.

Tactics: Bakhtosh prefers to fire at a distance. He will get at the maximum effective range for his weapons and chew his target to pieces. The extra distance allows him a little time to cope with the maneuvers of superior fliers. If forced to close with a foe, he will launch one of this missiles.

Recommendation: Close, firing continuously, then try to outfly him in standard fashion. Do *not* be daunted by his substantial reputation.

Know Your Graduation Service Ribbons

Know these ribbons and you'll be able to identify graduates from the Terran Confederation's training programs and campaigns. Clockwise from lower left:







Academy Graduation ▪ Flight Training ▪ Vega Sector Campaign

NEW on the FLIGHT DECK

This Month: Medal Recognition for New Recruits

Can you recognize, on sight, all the medals awarded by the Terran Confederation Navy? Don't be caught out when a senior officer tells you to identify all the "chicken guts" he's wearing. Instead, learn the medals shown below.

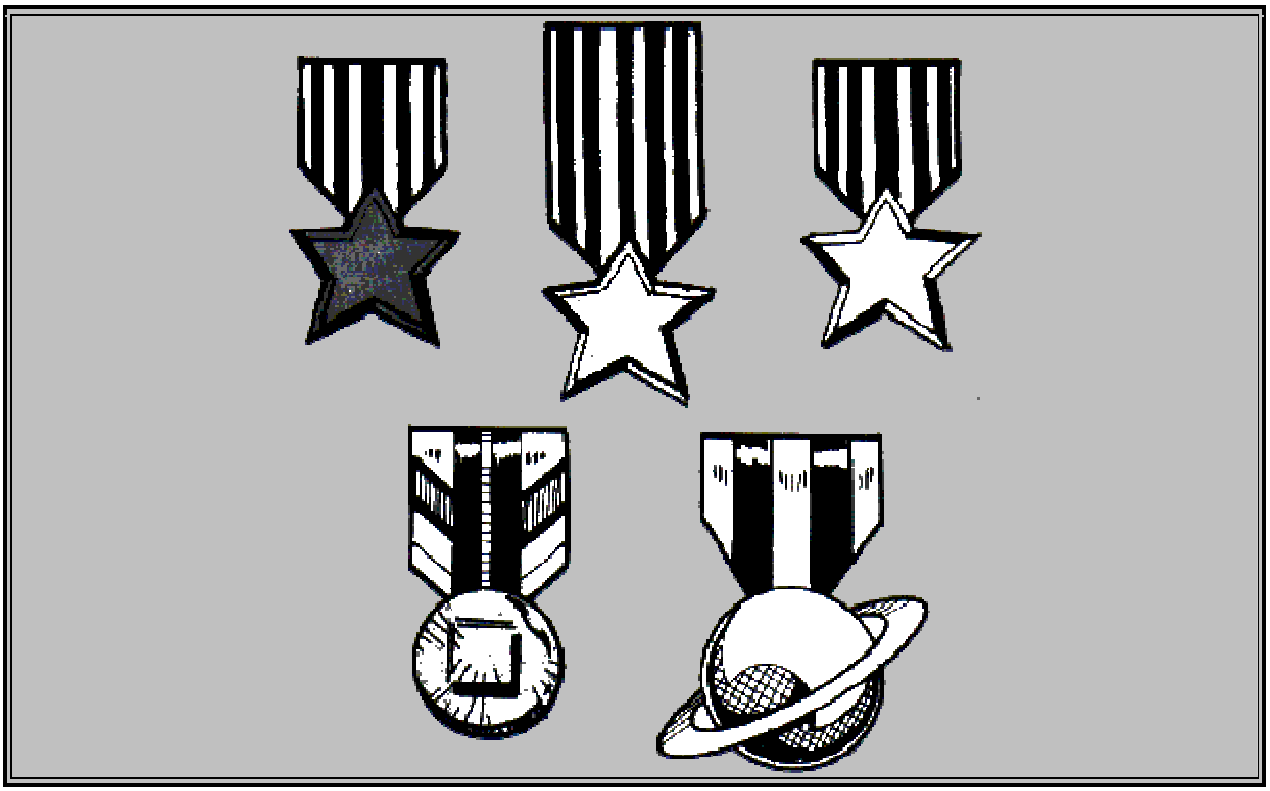

Clockwise from top left:

The Bronze Star: Awarded for exceptional bravery under fire.
The Gold Star: Awarded for exceptional bravery against hopeless odds.
The Silver Star: Awarded for exceptional bravery against overwhelming opposition. When a recipient wins an additional Silver Star, an extra bar is affixed to the top of the ribbon area.
The Terran Confederation Medal of Honor: Also nicknamed the "Pewter Planet," this is the highest medal awarded to military personnel.
The Golden Sun: Awarded for surviving the destruction of one's ship. The Golden Sun is awarded only once. The subsequent loss of ships gets you only the requisite, especially intensive, debriefing sessions and performance evaluations.

Playing WING COMMANDER

The 3-D Space Combat Simulator

* All screen shots shown are black and white representations of IBM-PC VGA/MCGA screens.

Starting the Game

After loading, the title/credit sequence appears. The credits repeat until you press a key. Then you will be asked if you want to "Start New Campaign" or "Continue Campaign." First-time users should select "Start New Campaign." If you have already played Wing Commander and wish to continue with a saved character, choose "Continue Campaign."

You begin the game seated at the controls of the TrainSim unit in the bar of the Tiger's Claw, the carrier on which your character serves. Almost immediately, your ship will explode and the words "Game Over" will appear in the view window of the TrainSim. You will be congratulated for a high score, and asked to input your name. Enter the last name and callsign you want your character to go by during the game. Then return to the view of the bar of the Tiger's Claw.

In the Bar

The bar is the favorite gathering spot for the crew of the *Tiger's Claw* and the perfect place to hear the latest scuttle-butt on current events in the Vega Sector. While in the bar, you can select from the following options:



The TrainSim: At the far left of the bar is the *TrainSim* unit, a video game/training simulator. Select it and you find yourself in the simulator's hot seat. After viewing the top scores, you are presented with a screen of four Kilrathi enemy fighter-craft. Select the foe you want to fight. This sets the difficulty level of the game - The Salthi (upper left) is the easiest opponent, followed by the Dralthi (lower left), and the Krant (upper right). The Gratha (lower right) is the toughest enemy ship type in the TrainSim. Select your opponent and you find yourself on a training flight against the Kilrathi.

The TrainSim unit is a safe, painless opportunity to lear the basics

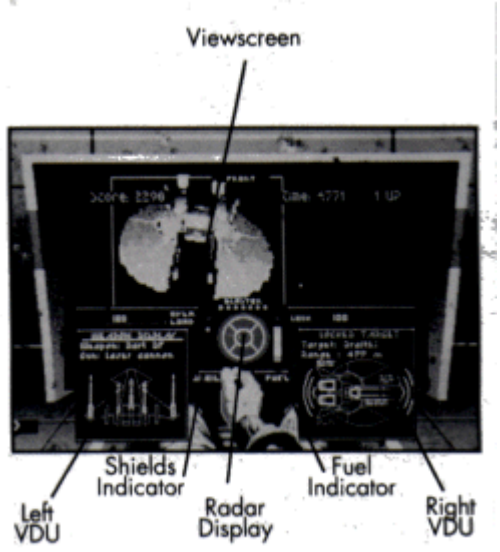

of flying and combat. Certain game funtions (e.g., navigation and communication) are disabled in the TrainSim, but it's still a good way to brush up your skills, try a new maneuver, or just fly for the fun of it. TrainSim missions are timed and you receive bonus points for destroying waves of ships quickly. Try to beat your wingman's high scores. For details on using the cockipt equipment (most of which appears in the TrainSim cockpit as well as in the real ships), see **In the Cockpit**, below.

Talking to People You'll always find the bartender and, usually, one or two pilots in the bar. Talk with everyone you can - you never know who will have clues and information helpful to you. The table reserved for wingmen is on the right side of the screen.

The Pilot's Scorew chalkboard: Above the table is a blackboard. Select it to see how the game's pilots are doing in the campaign game, relative to one another. The number of missions flown and total kills are displayed.

Barracks Door: On the far right of the bar is the doorway leading to the barracks. Select it to get to the next stage of the game.

In the Barracks

Bar: On the far left of the barracks is the hallway leading back to the bar. When you want to return there (to use the TrainSim, engage in conversation, and so forth), select this area.

Bunks (Saved Games): In the middle of the barracks are eight bunks. They're not just decoration: They're the means to save and load games if your system allows this. (See your Reference Card for details.)

Airlock: In the rear wall of te barracks is an airlock. Moving your pointer over it brings up a message asking if you want to quit the game. Selecting the airlock returns you to your computer's operating system.

Mission Hangar: To the far right is the doorway to the Mission Hangar. Selecting it takes you to your next combat mission.

Mission Hangar

Selecting Mission Hangar puts you into the briefing room. There you receive orders from Colonel Halcyon, including your objective, your navigation route, and your wingman assignment. In **Wing Commander**™, you're always the wingleader... and as long as you

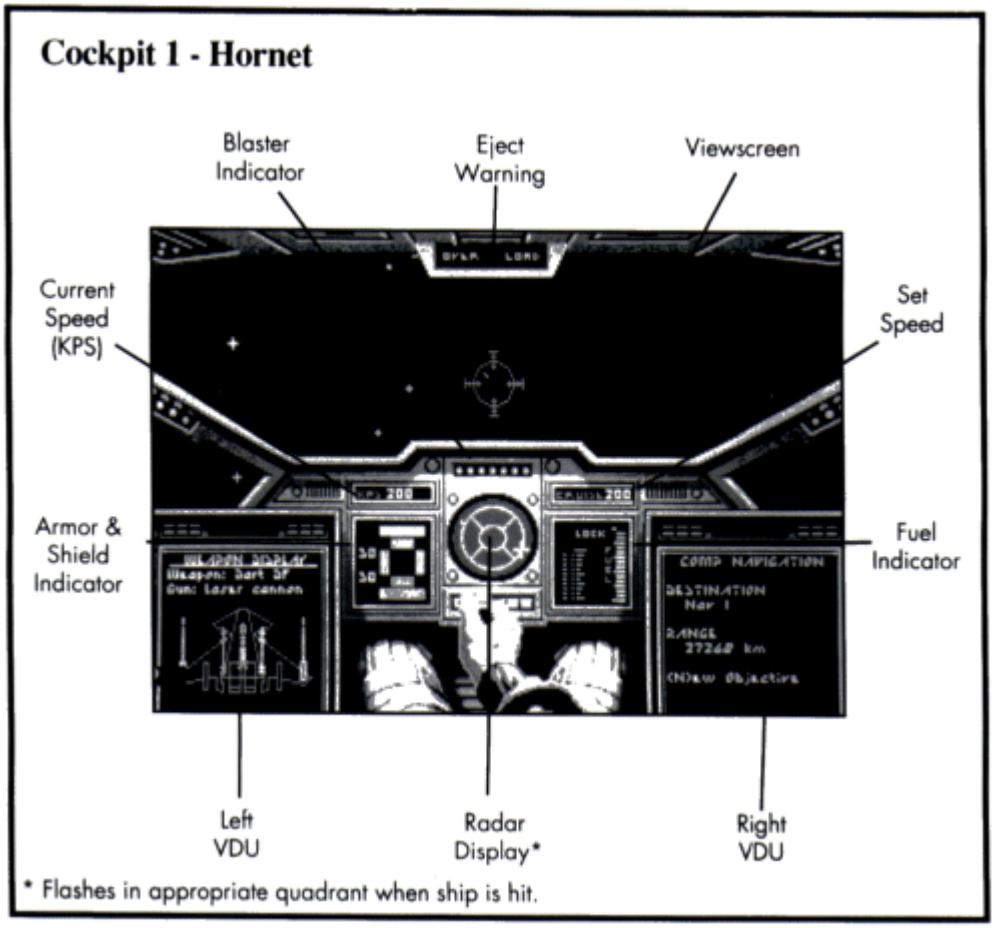

keep your wingman alive, you'll always have a wingman.

Don't worry about writing down details of your navigation route; it'll be loaded into your ship's computer automatically.

After being dismissed from the Mission Briefing, you go into a cinematic sequence that takes you to the ship's hangar, into your fighter, and through the launch sequence.

In The Cockpit

Now you're in your fighter's cockpit. The wide array of information screens available to you may seem a little intimidating at first, but readiny them quickly becomes second nature.

When you launch, you see space through your ship's front viewscreen. You can also select side and rear views, as well as chase plane, missiles, tactical and cinematic views.

During a **Wing Commander**™ campaign, you will have the opportunity to fly four types of ships. THough each cockpit has a slightly different *arrangement* for information screens, they all have the same screens. Refer to the diagrams in this section for the layout of each cockpit.

Viewscreen: The viewscreen and Heads-up Display provide a clear view of space directly ahead of you. A circle with crosshairs shows where your ship's guns are aimed; brackets indicate the position of the ship you currently have targeted. Naturally, you'll want to maneuver so that the crosshairs overlap the brackets when you fire your ship's

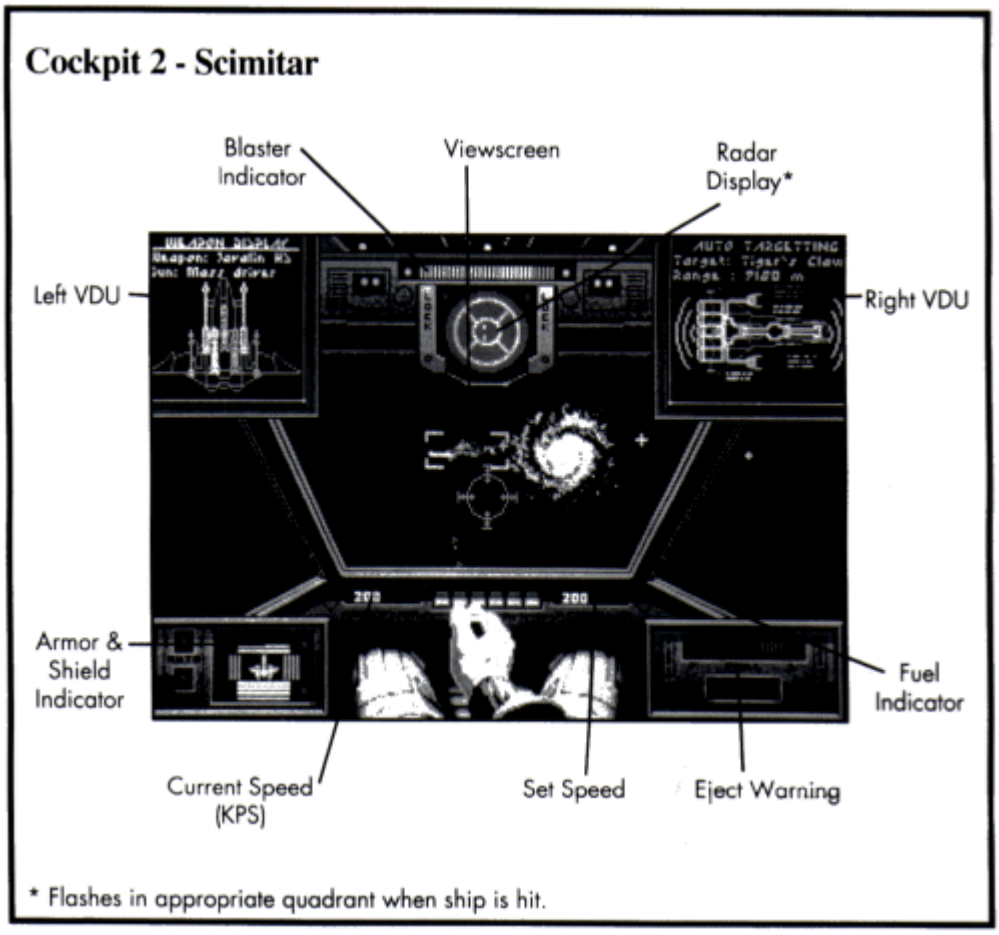

guns. When other vessels communicate with your, colored brackets appear around them

Radar Display: The circular screen in every cockpit is its radar display. Unlike most radar displays, this one doesn't show you how far away

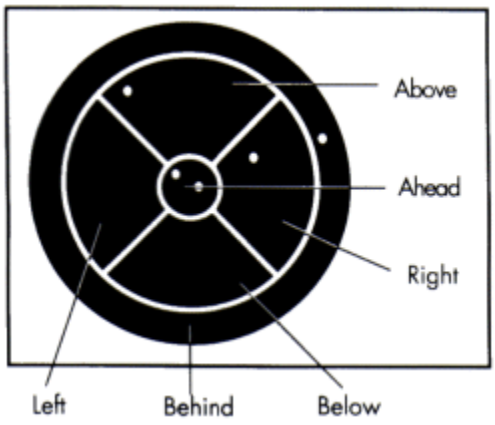

targets are but, instead, how far you have to rotate to bring them into your front viewscreen.

The radar display is divided into six sections. Radar contacts are displayed as dots. The outermost ring shows the position of enemies *behind* you; center circle shows the position of enemies *ahead* of you; and the four middle sections represent ememy positions *alongside* and *above* of *below* you.

Tactical Tip: To head toward a target, select the dot representing that target on the radar display and maneuver your ship intil that dot is centered in the inner-most circle of the display. A dot centered in the radar display represents a ship directly ahead of you in your viewscreen.

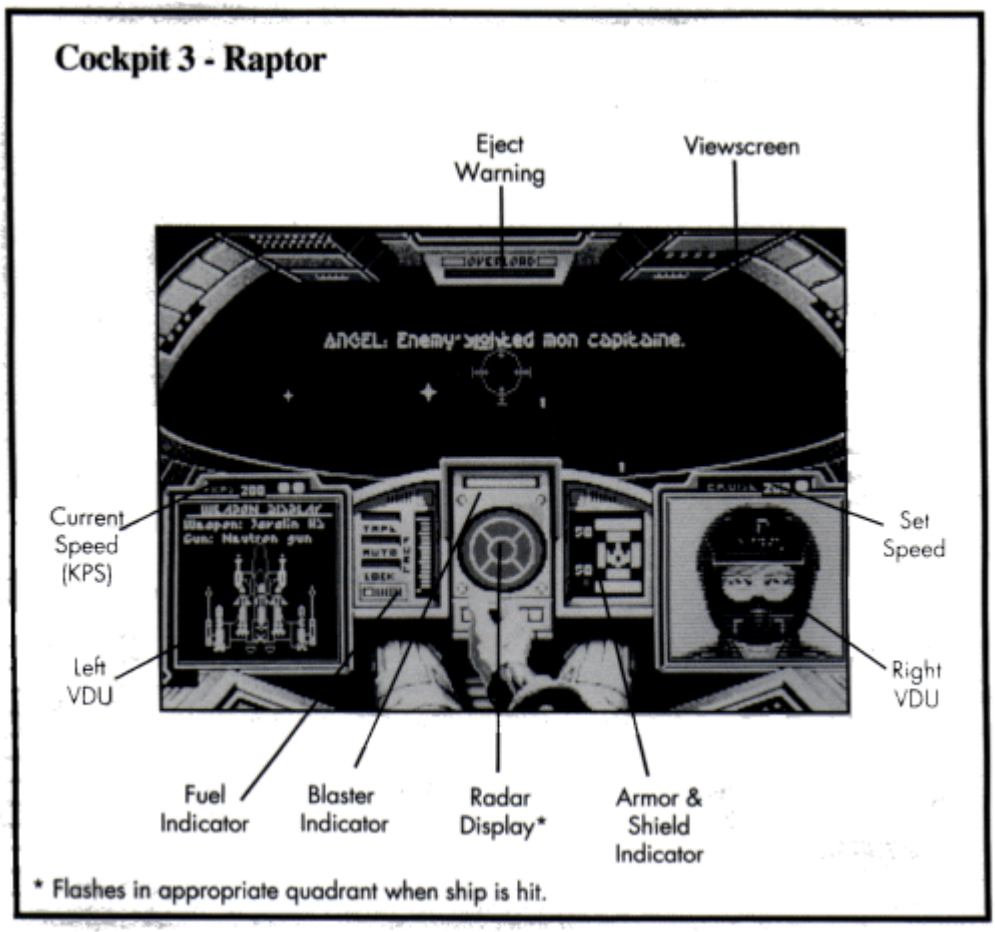

Left VDU (Video Display Unit): On the left VDU is a profile of your fighter, showing your ship's status.

You can cycle through screens displaying damage your ship has taken. Damaged systems appear in a different color, along with a description of the system.

You can change your ship's active gun, if you have more than one to choose from. The "Full Funs" option fires all guns at once.

You can also change your active weapon delivery system (missiles or mines), if you have more than one to choose from.

Right VDU (Video Display Unit): The right VDU has several functions: Here, you can display the Targeting Screen, which indicates the status of the ship you are currently targeting. This screen appears automatically when you fire your ship's guns or when you select the targeting feature.

In addition, you can display range information when navigation mode is active.

Finally, the right VDU functions as a Communication Screen, showing both your communications options and, on some systems, incoming video from other ships when they talk to you. See **In-Flight Systems** and your Reference Card for details.

Armor and Shields Indicator: Small bars on this screen indicate the status of your ship's armor and shields. These bars disappear as armor and shields take damage. Shields gradually regenerate unless the shield generator

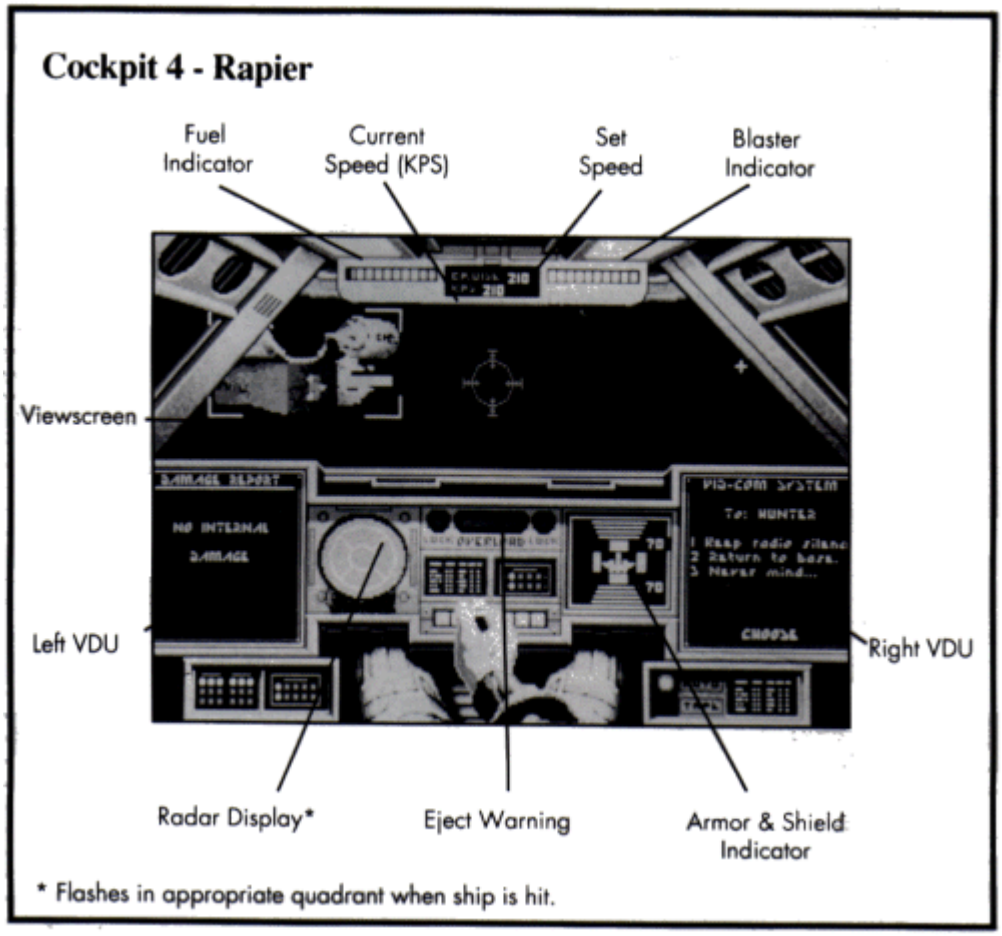

is destroyed. Once damage gets through the shields, armor begins taking damage and won't regenerate.

Fuel Indicator: This bar shows how much fuel you have; the bar becomes shorter as you use up fuel. Afterburners boost your speed dramatically, but use up fuel at a ferocious rate, so use them sparingly. If you run out of fuel, you will only be able to coast on reserves at a speed of 50 KPS.

Speed Indicator: The Speed Indicator may be one gauge or two, depending on your cockpit type. "Set Speed" shows the speed your fighter will try to maintain on its own (like the cruise control on an automobile). "KPS" shows your ship's current speed, in klicks (kilometers) per second.

Tactical Tip: The safest speed for negotiating asteroid fields is 250 KPS.

Blaster Indicator: This gauge shows the power level of your ship's active gun. Frequent use of the gun runs down your blaster power. Your guns will not fire if you have no blaster power. Guns recover power gradually, and recovery is slowed if your shields are also regenerating.

Eject Warning: This light flashes if your ship has sustained significant damage. When the eject warning starts flashing, you must decide how serious the situation is and whether to eject or not. If you decide to eject, the Confederation will suffer from the loss of a starfighter, but you will live to fight another day.

In-Flight Systems

Targeting System: When the Targeting Screen is up, it displays a profile of the ship you have targeted, along with any damage the target may have sustained.

To target a ship, position it in the center of your view screen and activate the ship's targeting feature. Brackets appear around the enemy ship. Normally, you lose the lock on a target you are no longer facing. If you want to keep a target locked even when you're not facing it, select "Lock Target."(See Reference Card for details.)

Tactical Tip: If you've just dispatched an enemy in the midst of a crowded dogfight, and you don't want to divert attention from your viewscreen to look at the radar, just set your fighter into a spin or tight turn. Out of the corner of your eye, you can see whenever the right VDU switches from its neutral status to the Targeting Screen. Even if the next target is so far ahead of you that you can't see the targeting brackets, or it is just out of sight (left, right, up, or down from where you're currently looking), the Targeting Screen will come up and you'll know you're facing an enemy.

Navigation System: In Navigation Mode, the Nav screen shows your currently selected Nav point and the distance you must travel to reach that objective. Selecting Navigation a second time brings up the full-screen Navigation map, so that you can give it a good look. When you're in the Nav Map, game time is suspended - you can study the mission in as much detail as you want, for as long as you want.

Each mission you fly consists of several objectives at different Nav points. You can move the pointer to any Nav point in your current mission. When you point at something, it will be highlighted and notes about it will appear on the left side of the Nav map. You can also scroll through the Nav points (and the information about them).

You may examine any Nav point, but when you have highlighted the objective you are expected to tackle next in your mission, the words "Mission Flight Path" appear on the right side of the Nav map.

When you return to the cockpit screen, the last Nav point you selected becomes your new destination automatically.

When you reach a Nav point, the navigation computer intelligently (and automatically) selects the next assigned Nav point for you. You can either fly there (or anywhere else) manually or activate the auto-pilot and let it take you to your next objective.



Tactical Tip: The Nav map is drawn in only two dimensions, so it is possible for your ship to appear right on a Nav point while your ship's systems tell you you're thousands of kilometers away from your objective. This simply means that you are "above" or "below" the Nav point.

Autopiloting System: When you activate Navigation Mode, crossharis appear on your radar display and in your heads-up display. The crosshairs on the radar screen represent the location of the current selected Nav point relative to your starfighter. To reach your selected destination, maneuver your ship intil these crosshairs are centered in their respective displays. You can fly to the destination manually, by keeping the crosshairs centered, but this may take a while.

You can shorten the trip by activating the autopilot if there are no hazards (enemy ships, asteroids, or mines) in the area. When this is the case, the autopilot light (marked "auto") goes on. Select autopilot, and your ship, wingman, and any escorted ships form up and proceed to the destination automatically. If you encounter any enemy vessels or hazards (asteroids, etc.) on the way, you leave the autopilot mode before you encounter the hazards.

Autopilot automatically disengages a few thousand meters from your destination.

Communications System: When you activate the Communication Screen, you are presented with a screen showing a menu of potential recipients for your message.

Select a receiver, and another menu appears listing the messages you can send. If thre is only one pilot who could receive your communication, no menu is presented and the message goes to the sole eligible recipient.

When other pilots decide to send a message to *you*, a box appears around their ship in your viewscreen

Wingmen sometimes disobey, but you can give them the following orders:

1. Break and Attack - A command to leave formation and engage enemy ships within 12,000 meters.
2. Keep Formation - Denies a wingman's request to break and attack on his own initiative.

Pride of the Fleet
The *TCS Tiger's Claw*

2642: The Confederation military command, determining that a need exists for a heavy space carrier, authorizes design of the *Bengal*-class carrier line. Trojan Four Spaceyards wins the assignment to build the new line of carriers.

2644: The newly-launched *TCS Tiger's Claw*, on its shakedown cruise, carrying a minimal spacecrew and an under-experienced command, finds itself in the path of a surprise Kilrathi invasion force. The ship's unexpected presence along the Kilrathi flight plan, clever tactics on the part of the command crew, and performance above and beyond the call of duty by the spacecrews rout the superior Kilrathi force. Shortly thereafter, *Tiger's Claw* is given permanent assignment in Vega Sector.

2645: The second *Bengal*-class space carrier, the *Kipling*, is launched. Owing to design modifications, the *Kipling* and all subsequent *Bengals* are 10 meters shorter and several tonnes less massive than the *Tiger's Claw*, making the *Tiger's Claw* the biggest space carrier in its class.

2649: *Tiger's Claw* performs a delaying action to allow Confederation transports carrying ground troops to retreat out of Kilrathi-occupied space. The engagement, known as Custer's Carnival, concludes with *Tiger's Claw* seriously damaged but able to return to port. The carrier is in spacedock undergoing repairs and refitting until early '50.

3. Form on My Wing -Return to formation and follow your vessel.
4. Return to Base - A command instructing your wingman to return to the *Tiger's Claw* immediately. **Note:** If obeyed, your wingman will not be available to you for the duration of this mission.
5. Help Me Out Here - A command to your wingmen to engage the enemy attacking you.
6. Attack My Target - A command telling your wingman to engage the enemy you have currently targeted. This is the only way your wingman will attack an enemy capital ship.
7. Keep Radio Silence - Prevents your wingman from talking to you until a "Broadcast Freely" is sent.
8. Broadcast Freely - Allows your wingman to talk to you; negates "Keep Radio Silence."
9. Never Mind - Disregard communication

Activate Communications when you have an enemy ship targeted and a menu of taunts appears. Select one of these and your insult is sent to the target.

Tactical Tip: Taunts sometimes attract enemy ships to you, drawing fire away from a ship you're protecting or, perhaps, saving a wingman whose ship has been damaged.

Landing

Once your mission is done, head back to the *Tiger's Claw*. When you are ready to land, target the *Claw*, approach from the *front* of the carrier, and use the Communications system to signal the ship's traffic control officer to "Request Landing." If you have met any of the following conditions, the *Claw* will clear you for landing and your ship's in-flight computer will initiate the suto-landing sequence when you get close enough to land. You must have accomplished one of the following:

a. traveled to any Nav point
b. achieved any mission objective
c. killed at least one enemy ship.

If your ship is heavily damaged, you will be granted emergency clearance. If there are any active enemy vessels in the same area of space as the *Tiger's Claw*, however, you cannot land until they are destroyed or have been routed.

Landing takes you back to the hangar, where you can see what damage your ship has sustained. From the hangar, you go to a debriefing where your performance during the mission is evaluated, and every significant mistake or achievement is noted by Colonel Halcyon. Afterward, if you've done anything particularly notable, you're taken to the Colonel's office for congratulations or a chewing-out.

The Campaign

As mentioned earlier, each campaign has its own plot and conclusion. Each series of missions you fly - and whether or not you're victorious - affects the Confederation's chances for ultimate victory in the Vega Sector.

After several missions, you'll be presented with Campaign Progress Screens, story updates which describe what's happening in the war. Do badly, and the forces of the Terran Confederation take a beating. Do well and Terran forces prevail. Do *very* well, and you may be responsible for Confederation victory in the Vega Sector

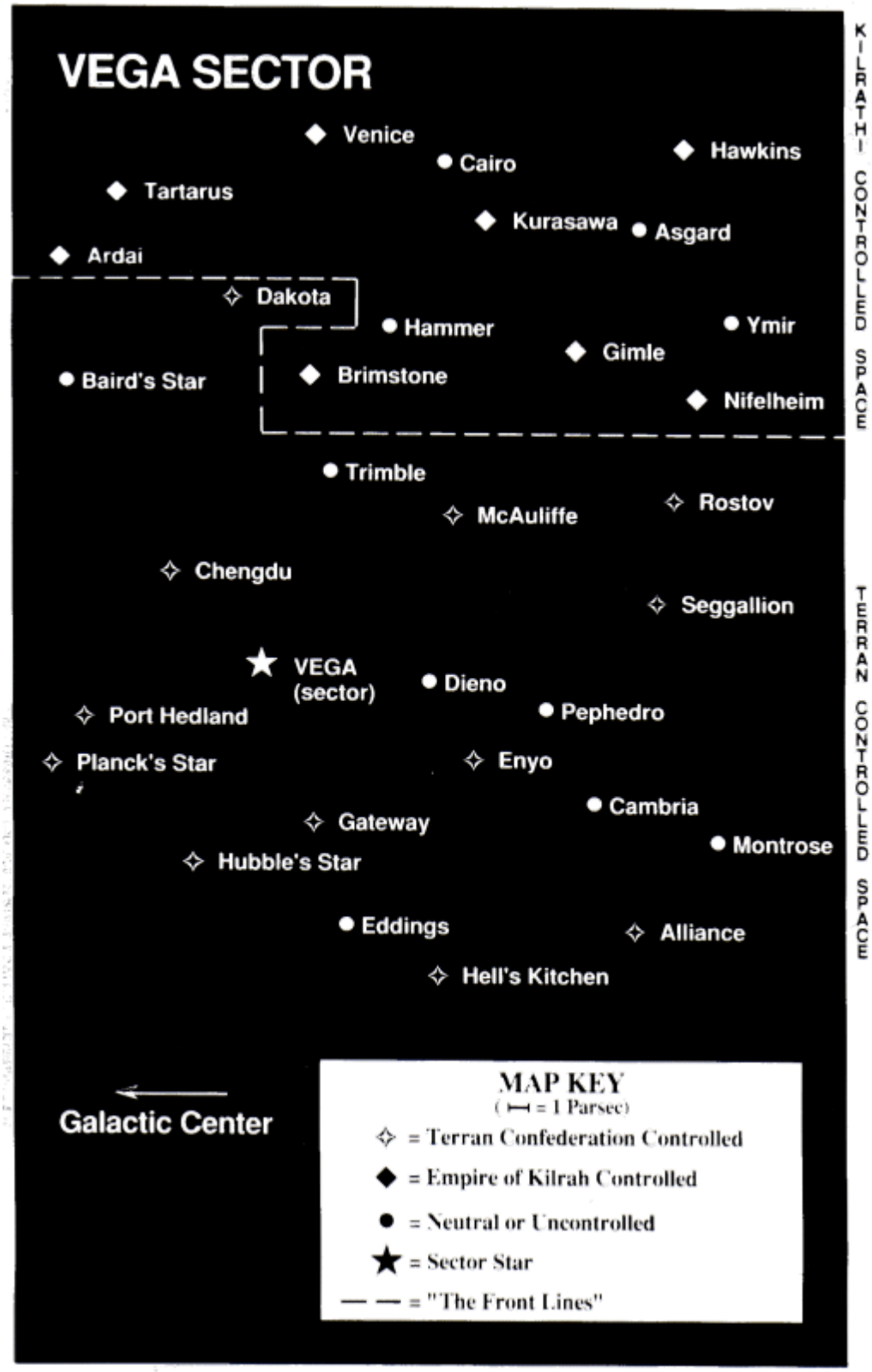
VEGA SECTOR
Venice
Cairo
Hawkins
Tartarus
Kurasawa
Asgard
Ardai
Dakota
Hammer
Ymir
Gimle
Baird's Star
Brimstone
Nifelheim
Trimble
Rostov
McAuliffe
Chengdu
Seggallion
VEGA
(sector)
Dieno
Port Hedland
Pephedro
Planck's Star
Enyo
Cambria
Gateway
Montrose
Hubble's Star
Eddings
Alliance
Hell's Kitchen
KILRATHI CONTROLLED SPACE
TERRAN CONTROLLED SPACE
Galactic Center
MAP KEY
(⊢ = 1 Parsec)
= Terran Confederation Controlled
= Empire of Kilrah Controlled
= Neutral or Uncontrolled
= Sector Star
= "The Front Lines"

***Claw Marks* Magazine by**
Aaron Allston

Gameplay Documentation & Reference Card
Steve Cantrell

Ducumentation and Blueprint Art
Glen Johnson

Documentation & Reference Card Editing
Warren Spector
Ken Demarest III
Steve Cantrell
Jeff George

Documentation & Reference Card Graphics and Layout
Jackie Chapman
Mike Harrison

Packaging Design
Cheryl Neeld
Craig Miller

FURBALLS GOT YOU DOWN?.. READY FOR A LITTLE R&R?





The TCSO's coming to Vega Sector

with

Dancers (normal and zero-g)!
Singers!
Comedians!
Cyberlink Illusionists!

and the lovely

SARANYA CARR

star of Luna Jones, Jumpscout! (Down, boys!)

So it's all hands on deck...
Deck C, that is, Vidroom 3775, Tiger's Claw
2654.140, shows at 0600, 0800, 1000, 1200*

* If Duty Calls: Holovids will be available through the ship's library for those who can't attend in person.