Kilrathi Carrier: The Snakeir

Several of these carriers were sighted in the Firekka System during the Kilrathi "Sivar-Eshrad" during the Secret Missions 2: Crusade.

Length: 650 meters
Mass: 30,000 tonnes
Maximum Velocity: 150 kps
Cruise Velocity: 100 kps
Maximum Yaw: 1 dps
Maximum Pitch: 1 dps
Maximum Roll: 1 dps
Ship's Weapons: Turreted Lasers (6), Image Recognition Missiles (quantity unknown).
Ship's Armor: Fore Shield: 37 cm equivalent; Aft Shield: 37 cm equivalent; Front: 28 cm; Right: 36 cm; Left: 36 cm; Rear: 24 cm.

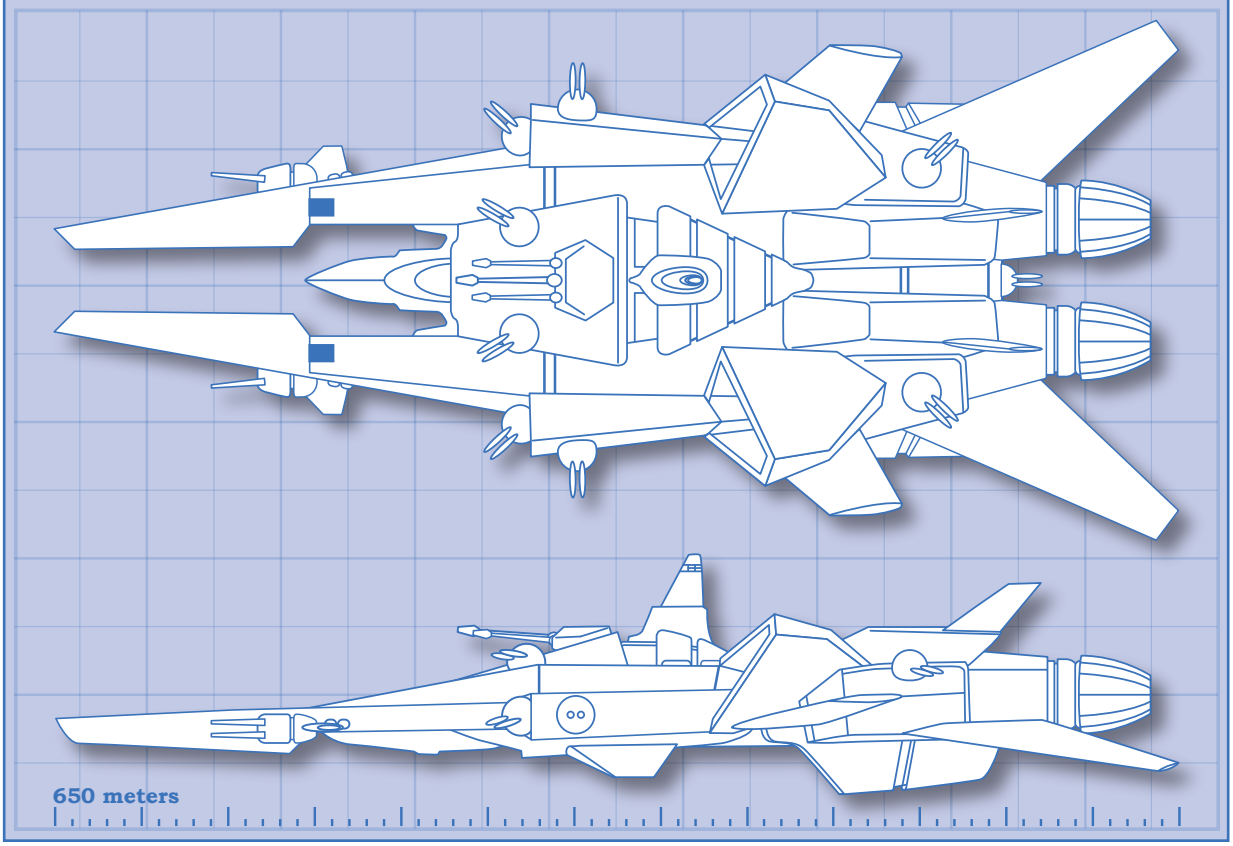

Kilrathi Star Post

Designed to be used as a refueling station, fighter base or a field command post, this starbase design is found exclusively in Kilrathi space, most recently in the Vega sector campaign and during Operation Thor's Hammer (Secret Missions 1). Lightly armed and armored (for a starbase), these Star Posts are vulnerable to major attacks.

Length: 550 meters
Mass: 40,000 tonnes
Maximum Velocity: Stationary
Ship's Weapons: Turreted Lasers (4), Friend or Foe Missiles (quantity unknown).
Ship's Armor: Fore Shield: 20 cm equivalent; Aft Shield: 20 cm equivalent; Front: 18 cm; Right: 18 cm; Left: 18 cm; Rear: 18 cm.

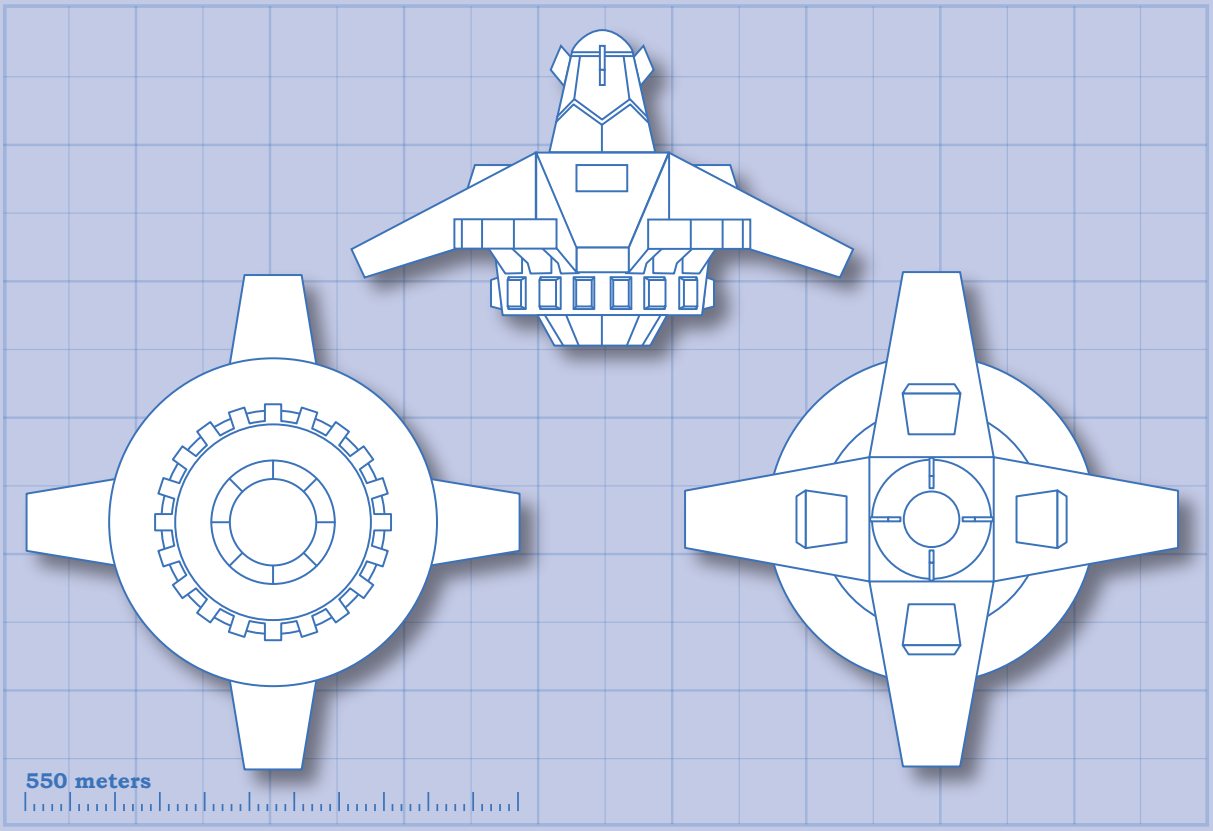

Kilrathi Dreadnought: The Sivar

Named after the Kilrathi warrior god, this unusual warship was commanded by Admiral Thrakra, son of the Kilrathi Emperor. This was the flagship of the strike fleet that attacked the Goddard Colony in Secret Missions 1.

Length: 550 meters
Mass: 25,000 tonnes
Maximum Velocity: 200 kps
Cruise Velocity: 150 kps
Maximum Yaw: 1 dps
Maximum Pitch: 1 dps
Maximum Roll: 1 dps
Ship's Weapons: Turreted Lasers (5), Image Recognition Missiles (quantity unknown).
Ship's Armor: Fore Shield: 27 cm equivalent; Aft Shield: 17 cm equivalent; Front: 28 cm; Right: 26 cm; Left: 26 cm; Rear: 14 cm.

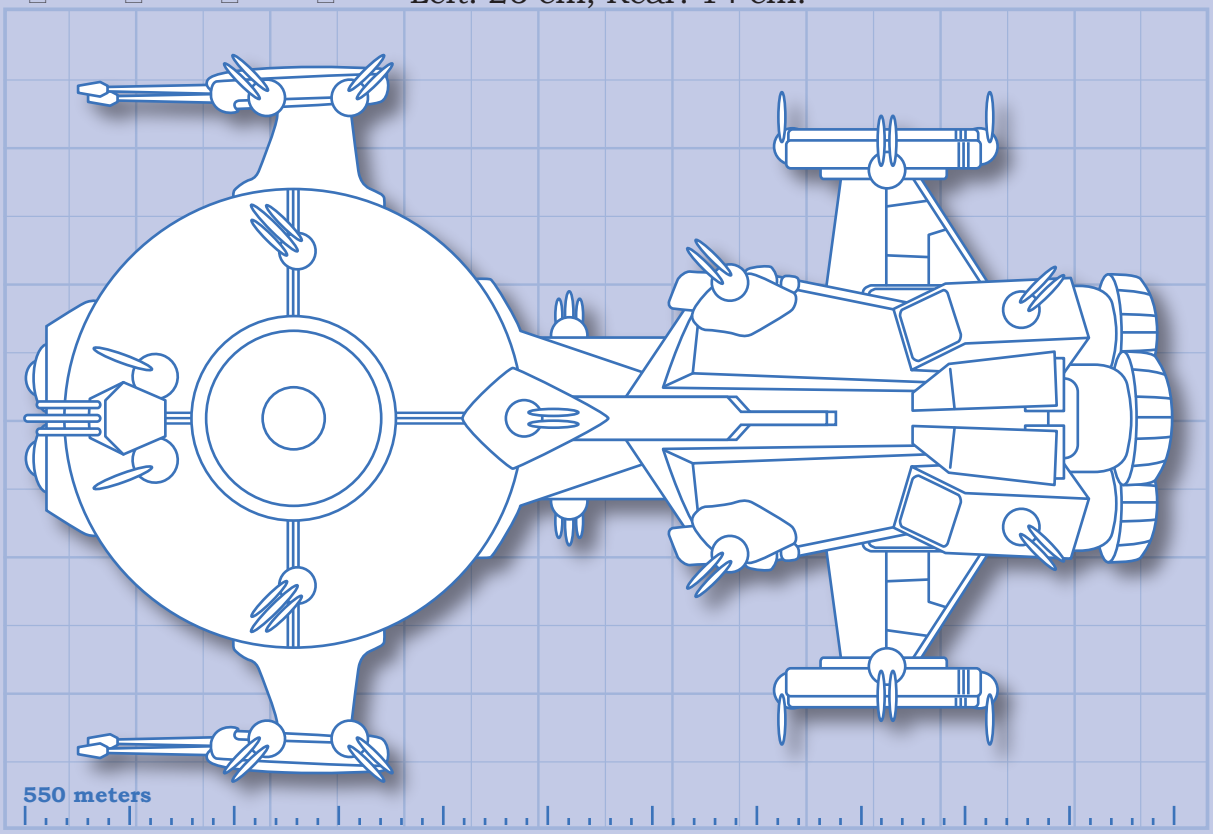

WING COMMANDER™

The 3-D Space Combat Simulator

GUNS:

Name:	Laser Cannon
Class:	Mk. 25
Max. Range:	4,800mms *
Blast Radius:	50m

* mms = meters relative to range and speed

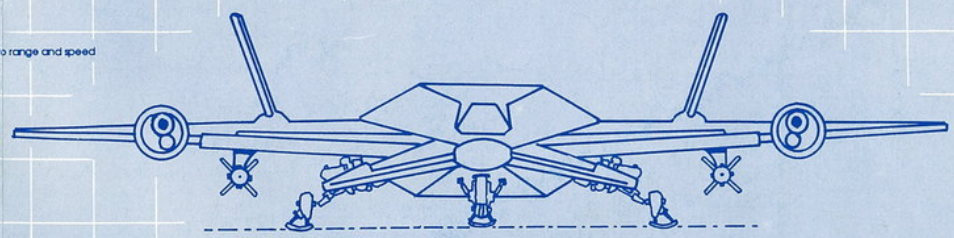

FRONT VIEW

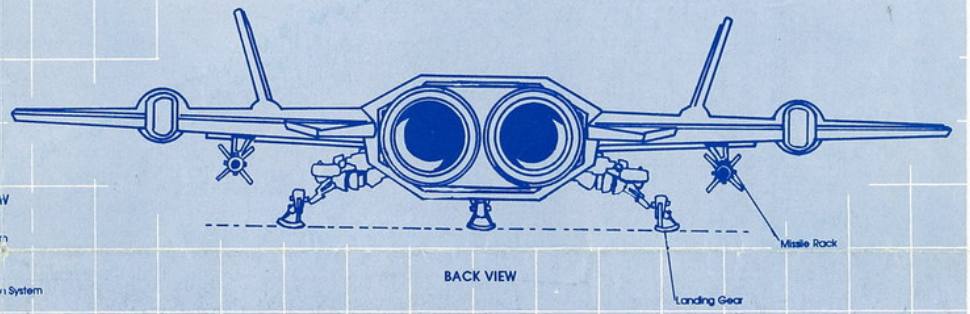

BACK VIEW

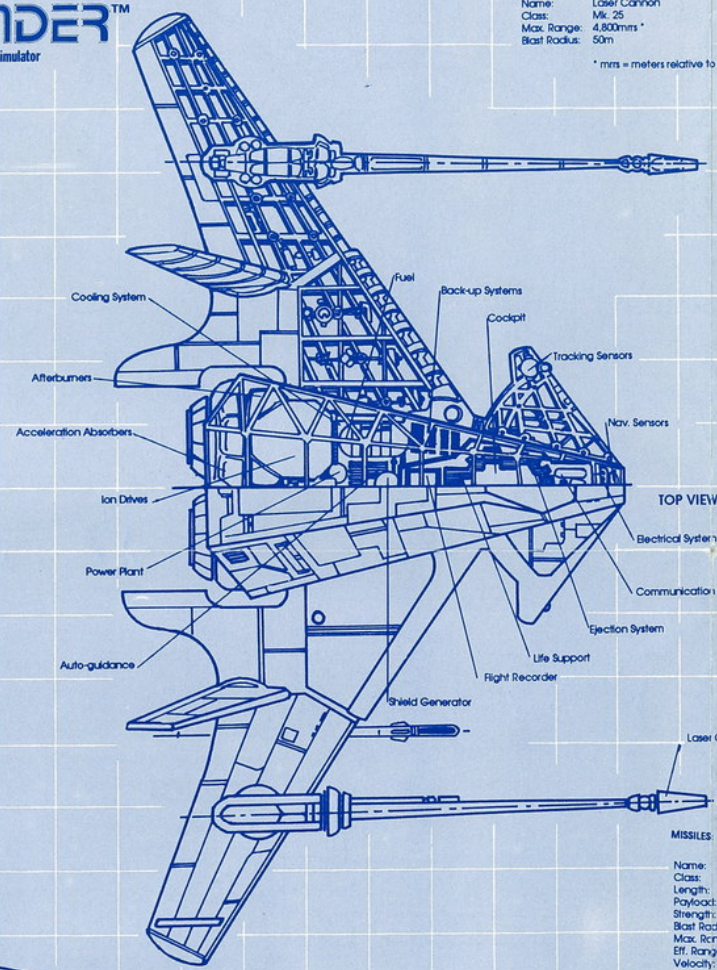

TOP VIEW

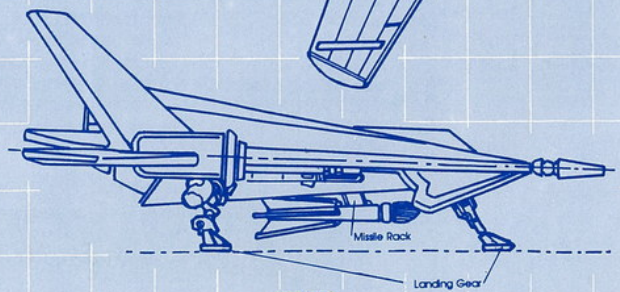

SIDE VIEW

MISSILES:

Name:	Dart DF
Class:	Dumb-Fire
Length:	2.6m
Payload:	Illudium PEW 36
Strength:	11,000 ESK
Blast Radius:	50m
Max. Range:	10,000m
Eff. Range:	2,000m
Velocity:	900 KPS
Max. Yaw:	10 DPS
Max. Pitch:	10 DPS
Max. Roll:	10 DPS



Name:	Javelin HS
Class:	Heat-Seeking
Length:	2m
Payload:	Illudium PEW 36
Strength:	10,500 ESK
Blast Radius:	50m
Max. Range:	9,000m
Eff. Range:	6,000m
Velocity:	800 KPS
Max. Yaw:	10 DPS
Max. Pitch:	10 DPS
Max. Roll:	10 DPS



Hornet

Class: Light Fighter
Length: 20 meters
Mass: 12.5 tonnes
Maximum Velocity: 420 kps
Cruise Velocity: 300 kps
Acceleration: Good
Maximum Yaw: 8 dps
Maximum Pitch: 9 dps
Maximum Roll: 8 dps

Ship's Weapons: Laser Cannon (2), Dumb-Fire Missiles (2), Heat-Seeking Missile.

Ship's Armor: Fore Shield: 3 cm equivalent; Aft Shield: 3 cm equivalent. Front: 3 cm; Right: 3 cm; Left: 3 cm; Rear: 3 cm.

Aerospace Engineering:

ORIGIN™

R94900XG(3)

WING COMMANDER™

The 3-D Space Combat Simulator

GUNS:

Name: Neutron Gun
Class: Mk. 40F
Max. Range: 2,500mrs *
Blast Radius: 50m

* mrs = meters relative to range and speed

Name: Laser Cannon
Class: Mk. 25
Max. Range: 4,800mrs *
Blast Radius: 50m

* mrs = meters relative to range and speed

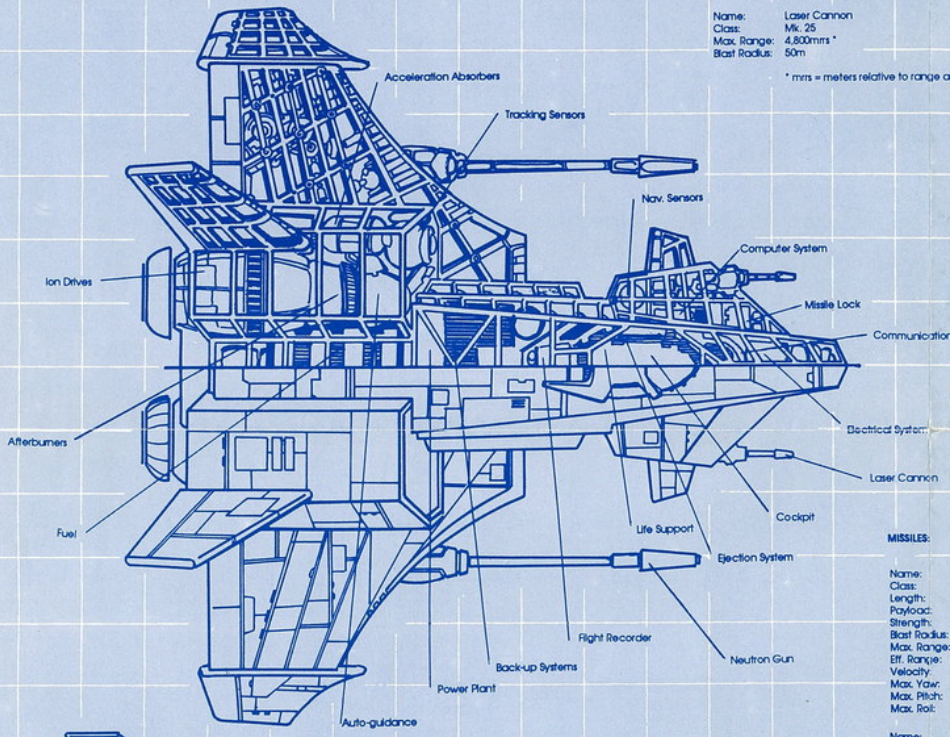

TOP VIEW

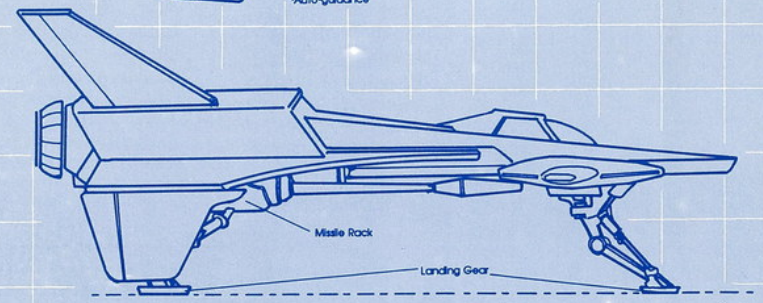

SIDE VIEW

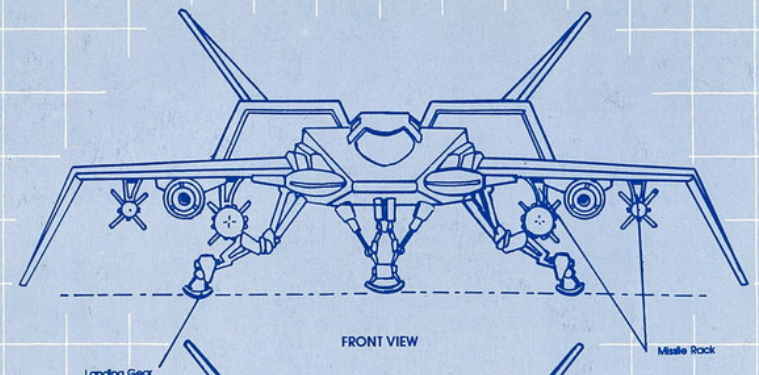

FRONT VIEW

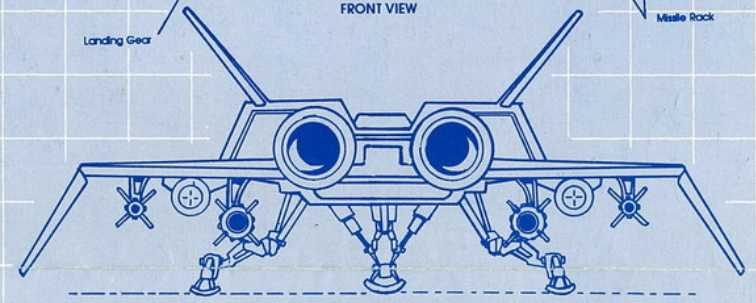

BACK VIEW

MISSILES:

Name: Dart DF
Class: Dumb-Fire
Length: 2.6m
Payload: Illudium PEW 36
Strength: 11,000 ESK
Blast Radius: 50m
Max. Range: 10,000m
Eff. Range: 2,000m
Velocity: 900 KPS
Max. Yaw: 10 DPS
Max. Pitch: 10 DPS
Max. Roll: 10 DPS



Name: Spiculum IR
Class: Image Recognition
Length: 2.2m
Payload: Illudium PEW 36
Strength: 9,500 ESK
Blast Radius: 50m
Max. Range: 8,000m
Eff. Range: 6,000m
Velocity: 800 KPS
Max. Yaw: 10 DPS
Max. Pitch: 10 DPS
Max. Roll: 10 DPS



Name: Pilum FF
Class: Friend or Foe
Length: 2.2m
Payload: Illudium PEW 36
Strength: 9,500 ESK
Blast Radius: 50m
Max. Range: 12,000m
Eff. Range: 8,000m
Velocity: 800 KPS
Max. Yaw: 10 DPS
Max. Pitch: 10 DPS
Max. Roll: 10 DPS



Rapier

Class: Medium Fighter
Length: 24 meters
Mass: 13.5 tonnes
Maximum Velocity: 450 kps
Cruise Velocity: 250 kps
Acceleration: Excellent
Maximum Yaw: 10 dps
Maximum Pitch: 10 dps
Maximum Roll: 10 dps

Ship's Weapons: Laser Cannon (2), Neutron Guns (2), Dumb-Fire Missiles (2), Spiculum IR (Image-Recognition) Missile, Pilum FF (Friend or Foe) Missiles (2).

Ship's Armor: Fore Shield: 7 cm equivalent; Aft Shield: 7 cm equivalent. Front: 5 cm; Right: 3 cm; Left: 3 cm; Rear: 4 cm.

Aerospace Engineering:

ORIGIN™

R94900XG

WING COMMANDER™

The 3-D Space Combat Simulator

GUNS:

Name: Mass Driver Cannon
Class: Mk. 30A
Max. Range: 3,000mrs *
Blast Radius: 50m

* mrs = meters relative to range and speed

Name: Neutron Gun
Class: Mk. 40F
Max. Range: 2,500mrs *
Blast Radius: 50m

* mrs = meters relative to range and speed

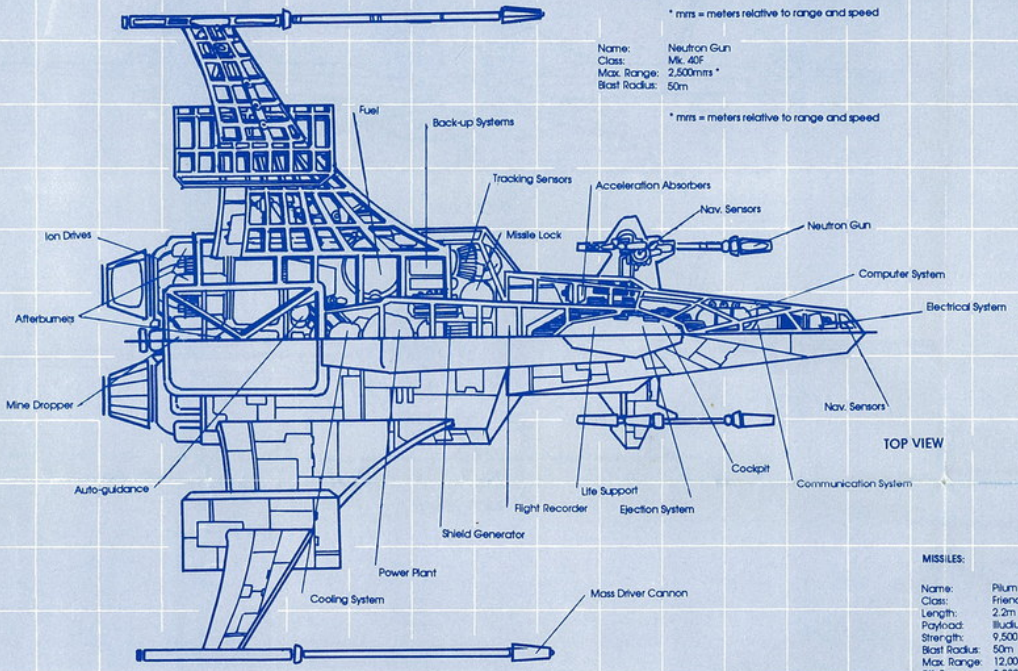

TOP VIEW

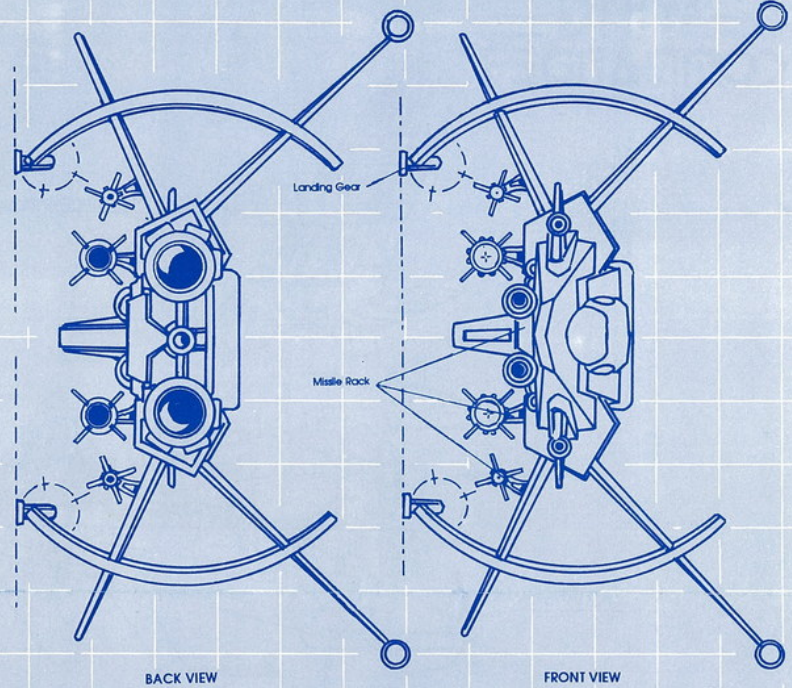

BACK VIEW

FRONT VIEW

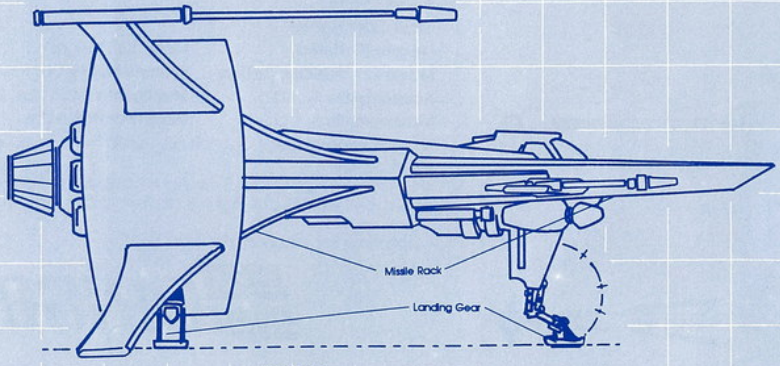

SIDE VIEW

MISSILES:

Name: Pilum FF
Class: Friend or Foe
Length: 2.2m
Payload: Illudium PEW 36
Strength: 9,500 ESK
Blast Radius: 50m
Max. Range: 12,000m
Eff. Range: 8,000m
Velocity: 800 KPS
Max. Yaw: 10 DPS
Max. Pitch: 10 DPS
Max. Roll: 10 DPS



Name: Spiculum IR
Class: Image Recognition
Length: 2.2m
Payload: Illudium PEW 36
Strength: 9,500 ESK
Blast Radius: 50m
Max. Range: 8,000m
Eff. Range: 6,000m
Velocity: 800 KPS
Max. Yaw: 10 DPS
Max. Pitch: 10 DPS
Max. Roll: 10 DPS



Name: Javelin HS
Class: Heat-Seeking
Length: 2m
Payload: Illudium PEW 36
Strength: 10,500 ESK
Blast Radius: 50m
Max. Range: 9,000m
Eff. Range: 6,000m
Velocity: 800 KPS
Max. Yaw: 10 DPS
Max. Pitch: 10 DPS
Max. Roll: 10 DPS



Raptor

Class: Heavy Fighter
Length: 36 meters
Mass: 20 tonnes
Maximum Velocity: 400 kps
Cruise Velocity: 250 kps
Acceleration: Good
Maximum Yaw: 6 dps
Maximum Pitch: 5 dps
Maximum Roll: 6 dps

Ship's Weapons: Neutron Guns (2), Gatling Mass Driver Cannon (2), Heat-Seeking Missiles (2), Spiculum IR (Image Recognition) Missiles (2), Pilum FF (Friend or Foe) Missile, Porcupine Space Mine.

Ship's Armor: Fore Shield: 7 cm equivalent; Aft Shield: 7 cm equivalent. Front: 8 cm; Right: 6 cm; Left: 6 cm; Rear: 8 cm.

Aerospace Engineering:

ORIGIN™

R94900XG(1)

WING COMMANDER™

The 3-D Space Combat Simulator

GUNS:

Name:	Mass Driver Cannon
Class:	Mk. 30A
Max. Range:	3,000mrs *
Blast Radius:	50m

* mrs = meters relative to range and speed

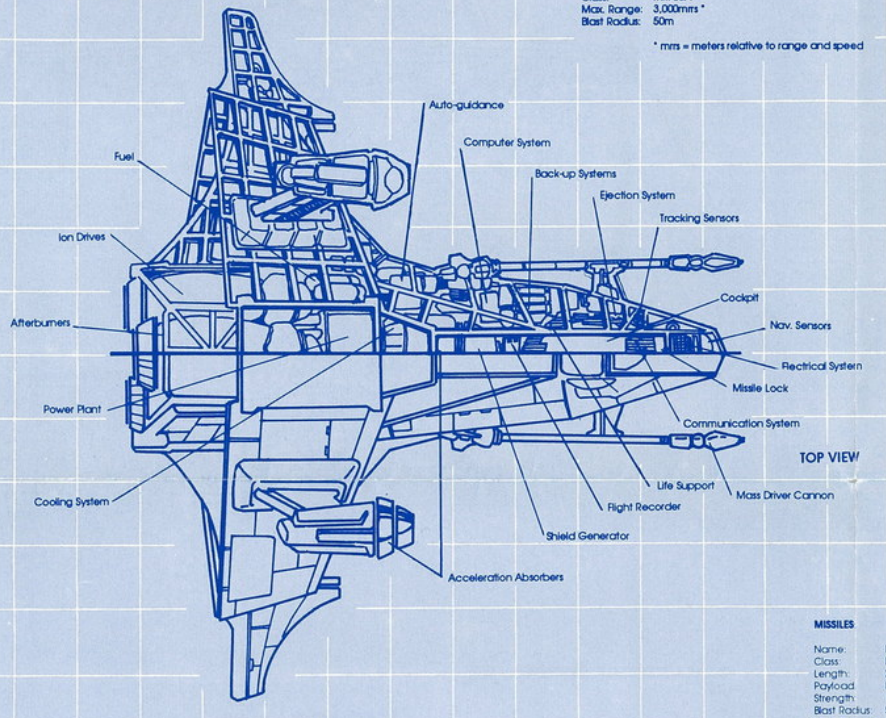

TOP VIEW

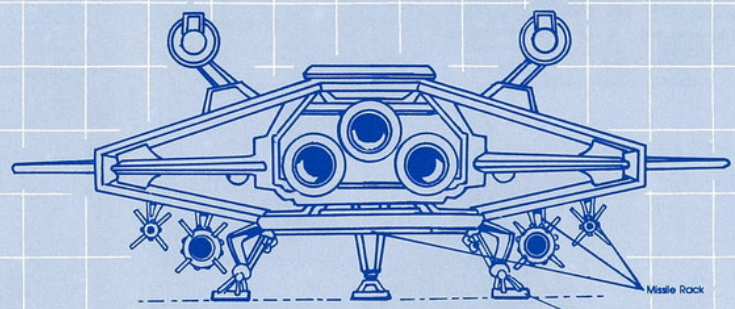

BACK VIEW

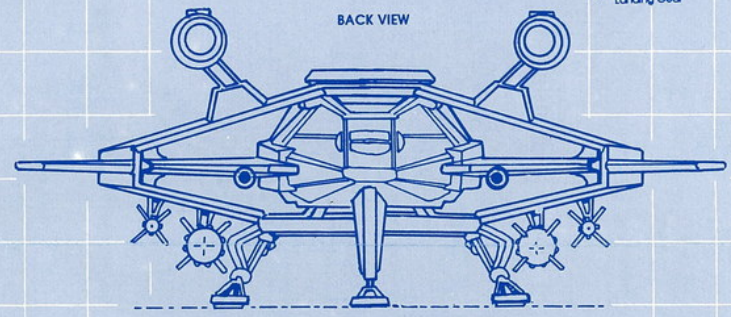

FRONT VIEW

MISSILES

Name:	Dart DF
Class:	Dumb-Fire
Length:	2.6m
Payload:	Illudium PEW 36
Strength:	11,000 ESK
Blast Radius:	50m
Max. Range:	10,000m
Eff. Range:	2,000m
Velocity:	900 KPS
Max. Yaw:	10 DPS
Max. Pitch:	10 DPS
Max. Roll:	10 DPS



Name:	Javelin HS
Class:	Heat-Seeking
Length:	2m
Payload:	Illudium PEW 36
Strength:	10,500 ESK
Blast Radius:	50m
Max. Range:	9,000m
Eff. Range:	6,000m
Velocity:	800 KPS
Max. Yaw:	10 DPS
Max. Pitch:	10 DPS
Max. Roll:	10 DPS



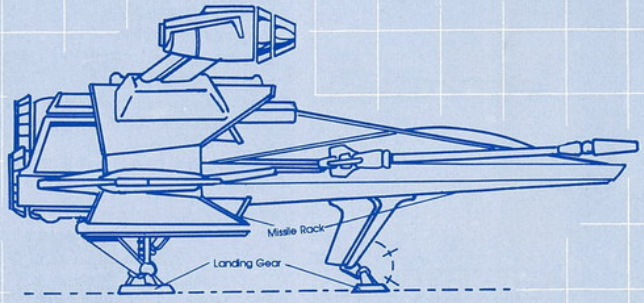

SIDE VIEW

Scimitar

Class: Medium Fighter

Length: 25 meters

Mass: 16 tonnes

Maximum Velocity: 360 kps

Cruise Velocity: 150 kps

Acceleration: Good

Maximum Yaw: 6 dps

Maximum Pitch: 6 dps

Maximum Roll: 7 dps

Ship's Weapons: Gatling Mass Driver Cannon (2), Dumb-Fire Missiles (2), Heat-Seeking Missiles (3).

Ship's Armor: Fore Shield: 4 cm equivalent; Aft Shield: 4 cm equivalent. Front: 6 cm; Right: 5 cm; Left: 5 cm; Rear: 6 cm.

Aerospace Engineering:

ORIGIN™

R94900XG(2)